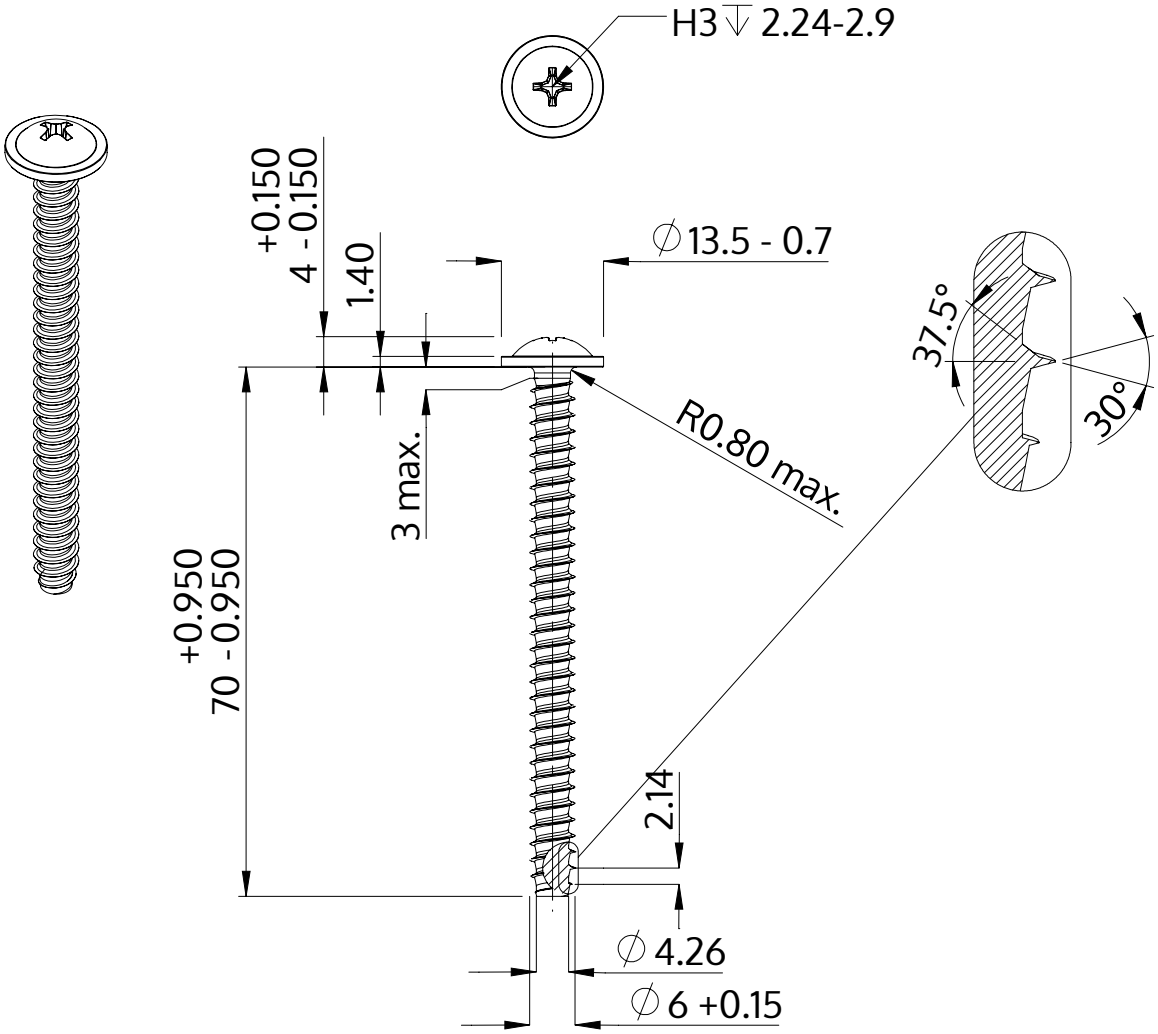

Description	STP31 6.0x70.0 - H3
Material	stainless-steel A2
Surface	bright, pickled and passivated
Weight	11.576 kg / 1000 pieces

SCREWERK	**STP310600700E**	
Metric Drawing A4	Scale 1:1	2024-10