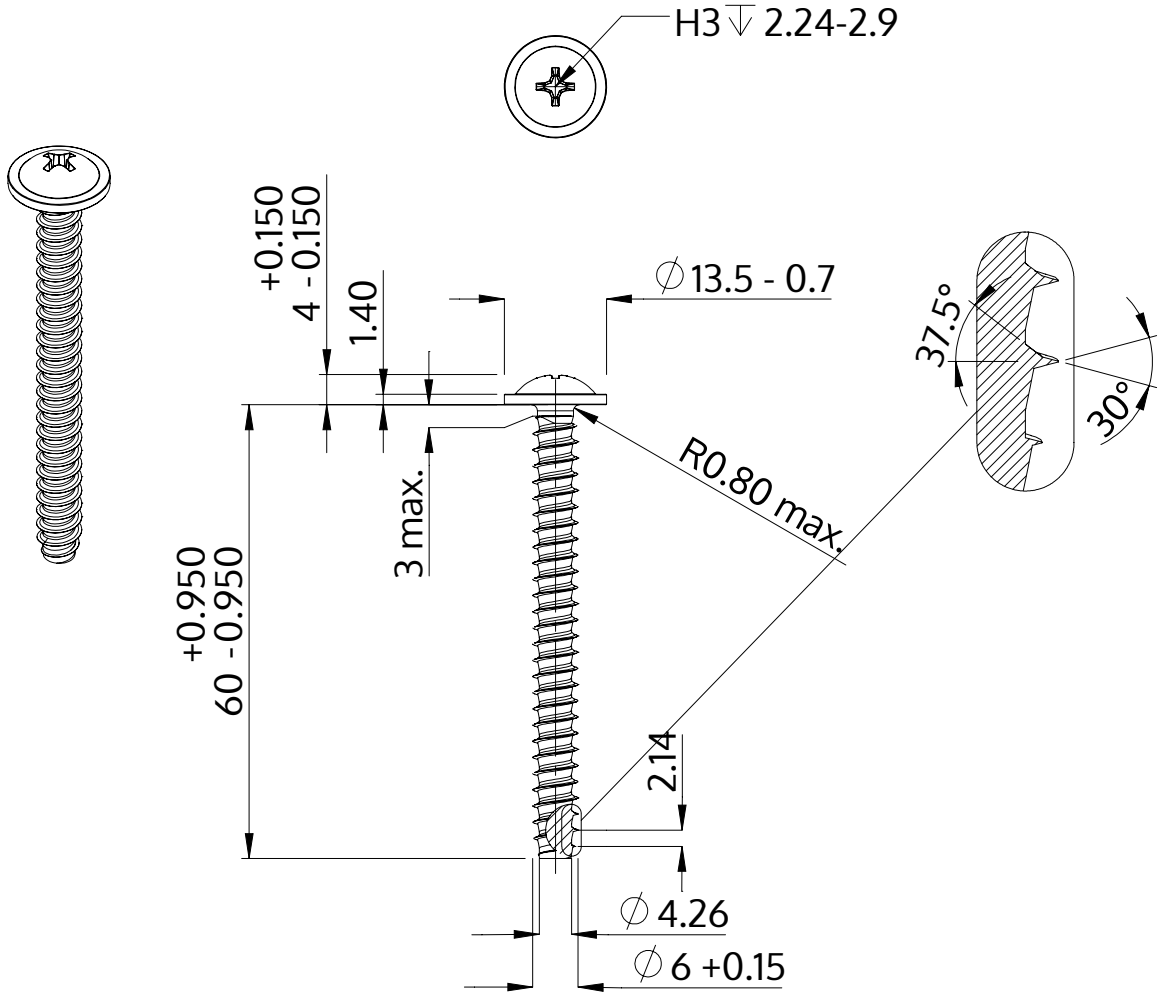

Description	STP31 6.0x60.0 - H3
Material	steel, hardened
Surface	Zinc-Nickel-plated min. 5µm, passivated black/ Cr-VI-free, baked, sealed
Weight	10.219 kg / 1000 pieces

SCREWERK	**STP310600600B**	
Metric Drawing A4	Scale 1:1	2024-10