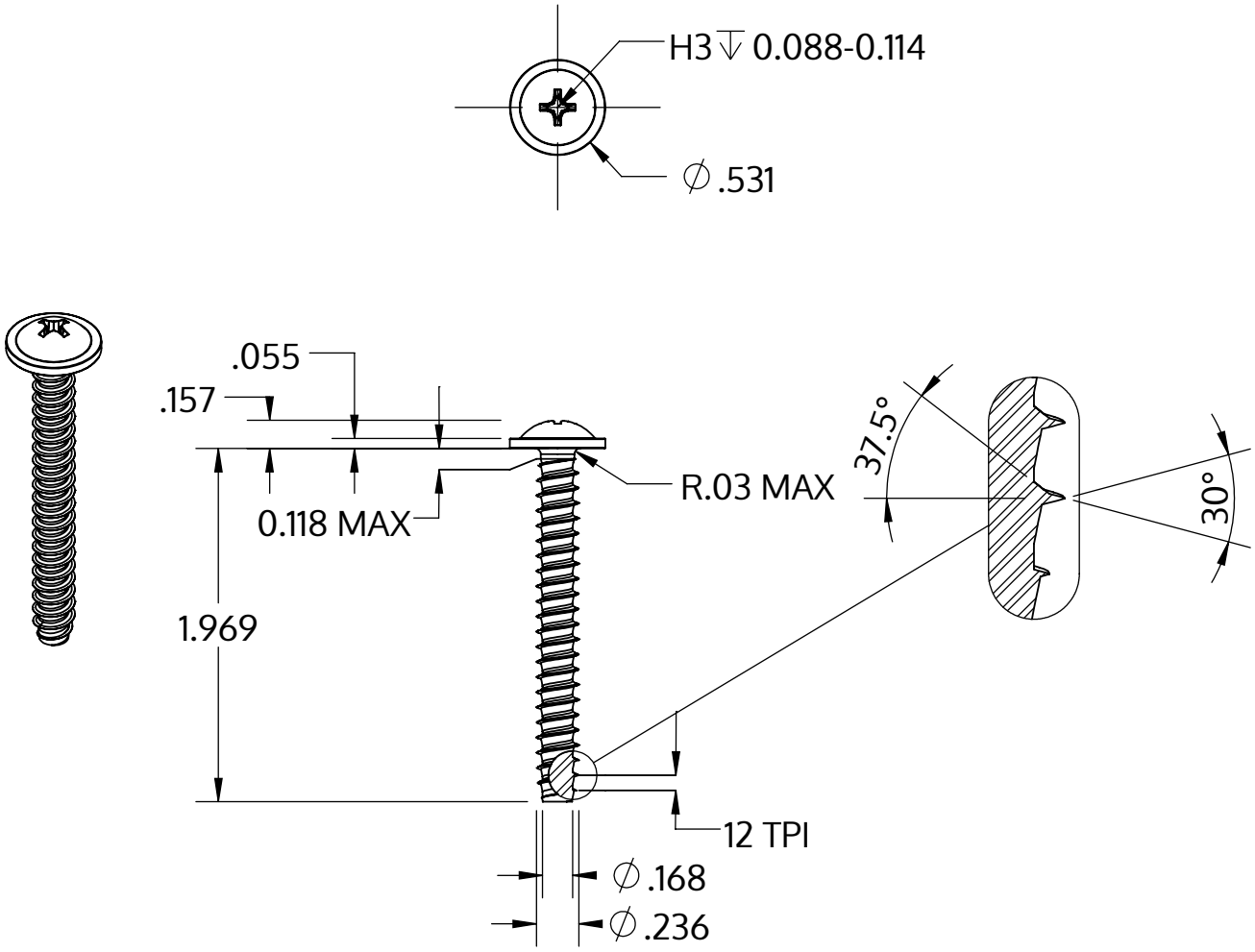

Metric size	M6 x 2.14 mm
US size (converted)	#0.236-12
	Tolerances [inch]
Length	+/- 0.031
Head diameter	+0 / -0.027
Head height	+/- 0.005
Thread diameter	+0.005 / -0

Descriere	STP31 6.0x50.0 - H3
Material	oțel, călit
Exterior	zincat, Nichelat, pasivat negru / nu conține Cr-VI, recopt, ermetizat
Greutate	8.863 kg / 1000 unități

SCREWERK	**STP310600500B**	
_Zoll Zeichnung Größe A	Scalarea None:1	2024-04