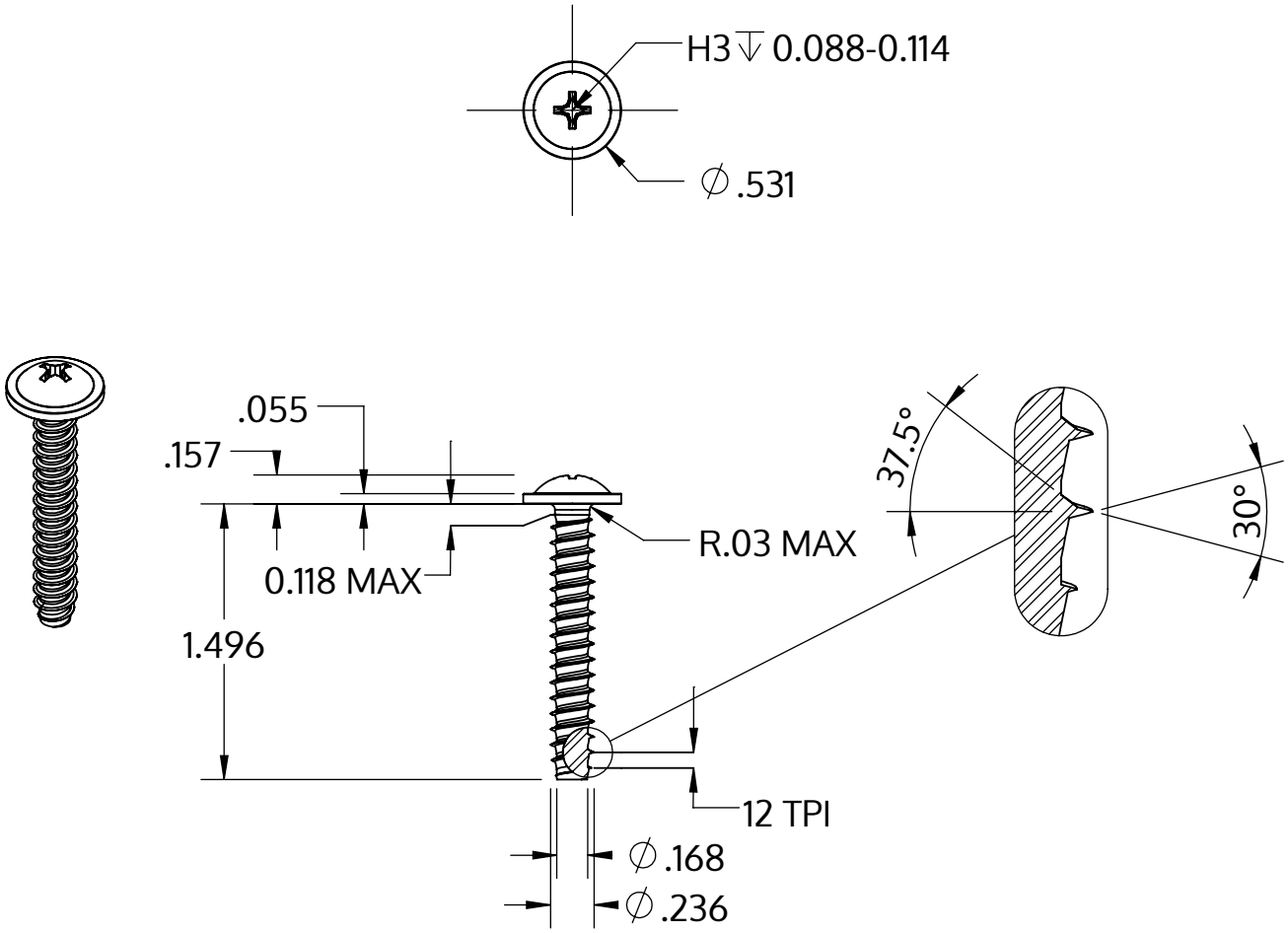


| | |
|---|---|
| Metric size | M6 x 2.14 mm |
| US size (converted) | #0.236-12 |
| | Tolerances [inch] |
| Length | +/- 0.031 |
| Head diameter | +0 / -0.027 |
| Head height | +/- 0.005 |
| Thread diameter | +0.005 / -0 |

| | |
|---|---|
| Descripción | STP31 6.0x38.0 - H3 |
| Material | Acero, endurecido |
| Superficie | galvanizado 5-7 micras, recocido, azul / pasivado transparente |
| Peso | 7.235 kg / 1000 Piezas |

| | | |
|---|---|---|
| SCREWERK | **STP310600380S** | |
| _Zoll Zeichnung Größe A | Escalada 1:1 | 2024-10 |