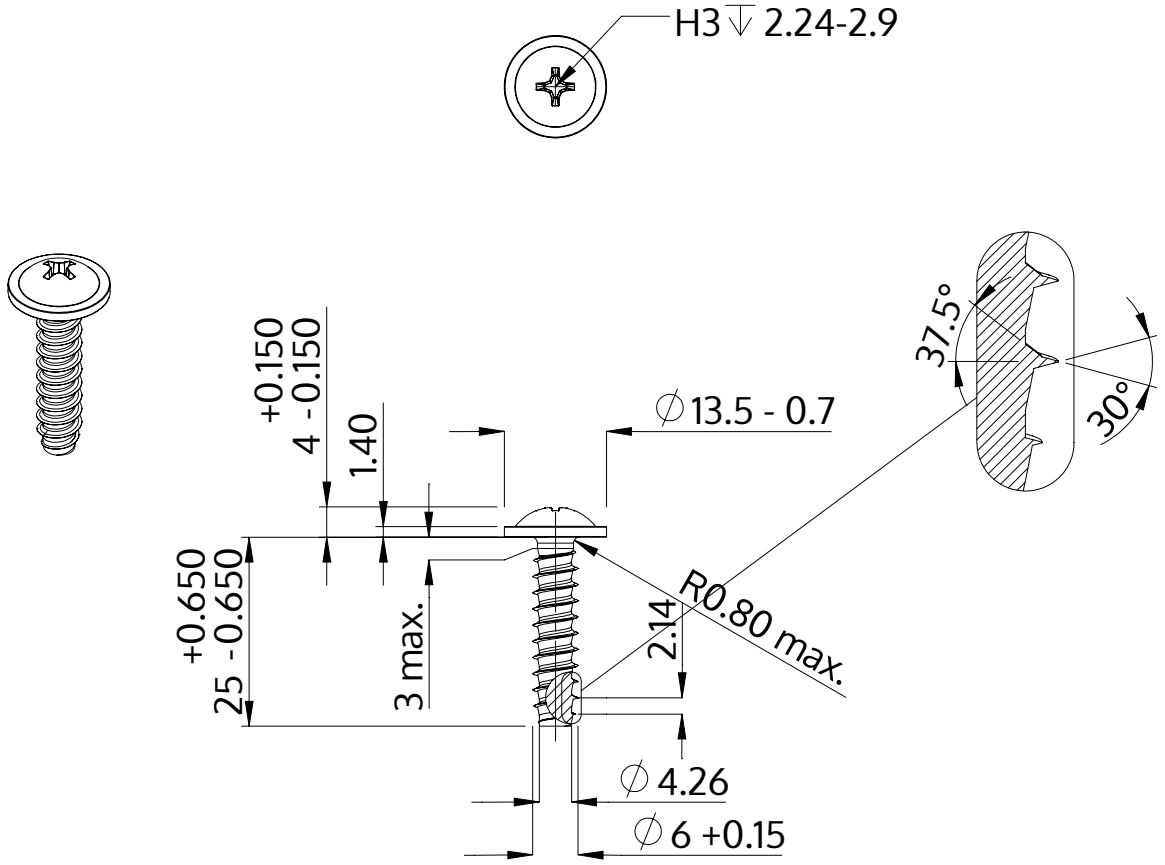


| | |
|---|---|
| Description | STP31 6.0x25.0 - H3 |
| Material | steel, hardened |
| Surface | zinc-plated 5-7 µm, baked, blue / transparent passivated |
| Weight | 5.472 kg / 1000 pieces |

| | | |
|---|---|---|
| SCREWERK | **STP310600250S** | |
| Metric Drawing A4 | Scale 1:1 | 2024-10 |