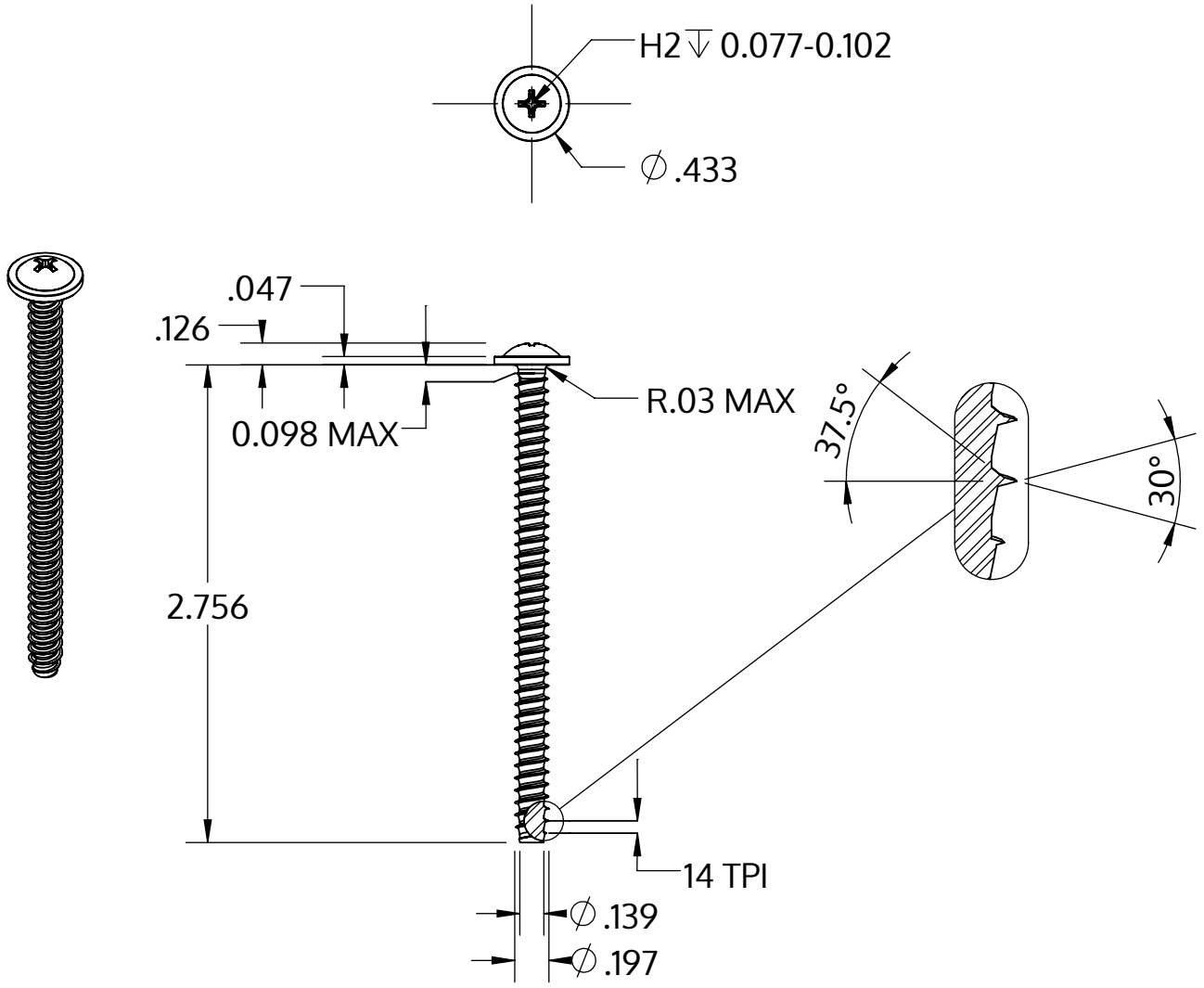


| | |
|---|---|
| Metric size | M5 x 1.8 mm |
| US size (converted) | #11-14 |
| | Tolerances [inch] |
| Length | +/- 0.037 |
| Head diameter | +0 / -0.027 |
| Head height | +/- 0.005 |
| Thread diameter | +0.005 / -0 |

| | |
|---|---|
| Beskrivelse | STP31 5.0x70.0 - H2 |
| Materiale | Stål, forædlet |
| Overflade | galvaniseret 5-7 µm, tempret, blå / transparent passiveret |
| Vægt | 7.838 kg / 1000 stykke |

| | | |
|---|---|---|
| SCREWERK | **STP310500700S** | |
| _Zoll Zeichnung Größe A | Skalering 2:1 | 2024-10 |