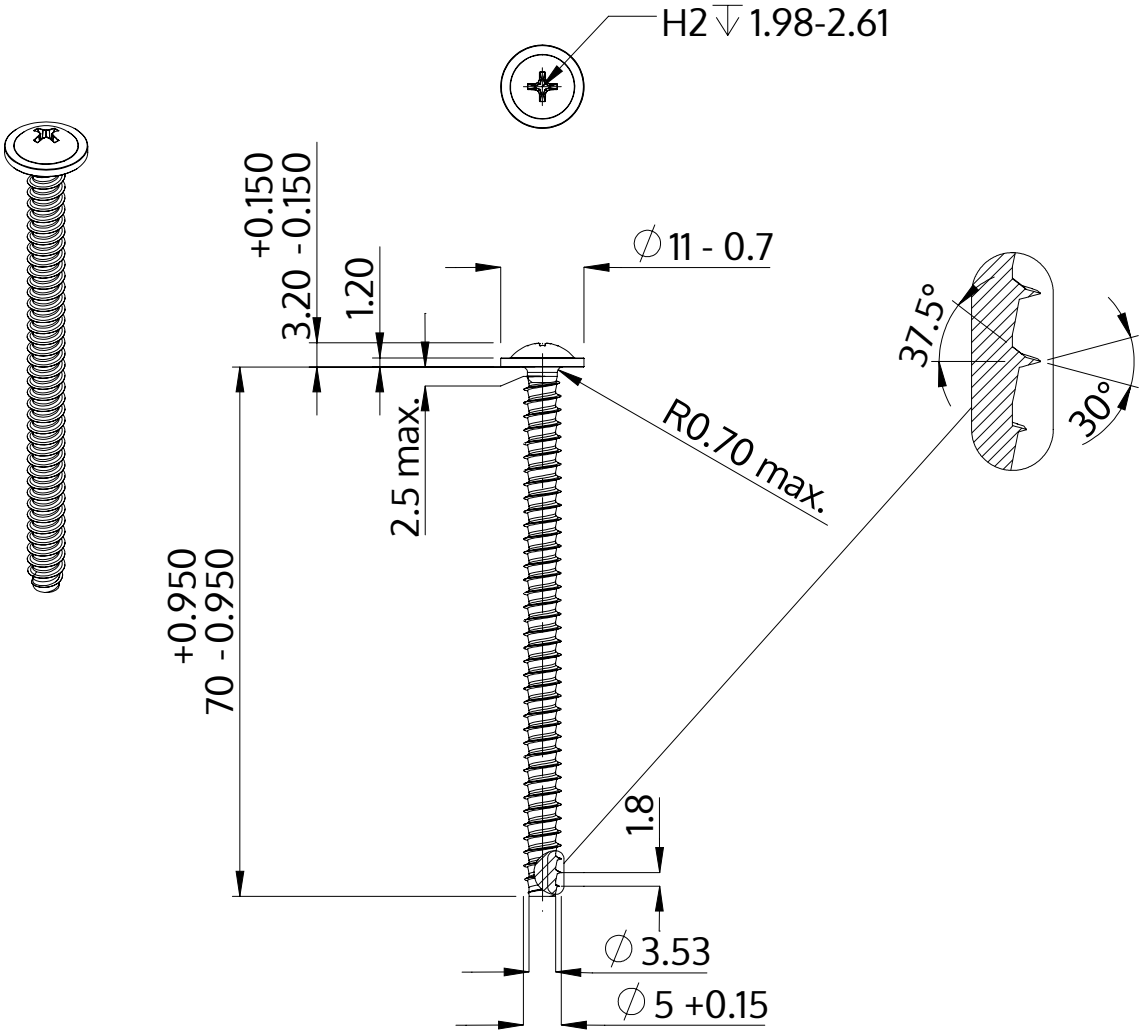

Description	STP31 5.0x70.0 - H2
Material	stainless-steel A2
Surface	bright, pickled and passivated
Weight	7.838 kg / 1000 pieces

SCREWERK	**STP310500700E**	
Metric Drawing A4	Scale 2:1	2024-10