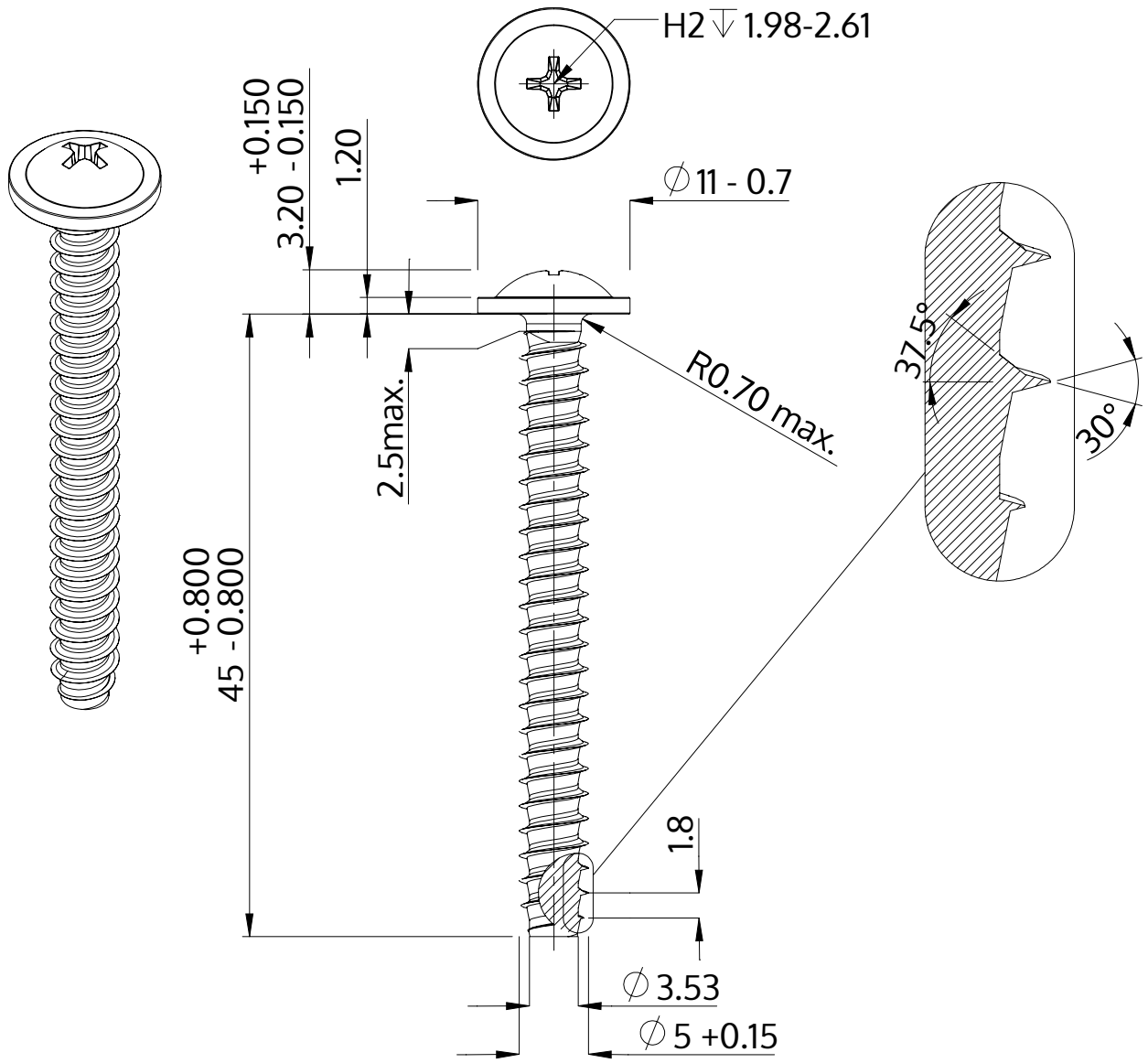

Description	STP31 5.0x45.0 - H2
Material	steel, hardened
Surface	Zinc-Nickel-plated min. 5µm, passivated black/ Cr-VI-free, baked, sealed
Weight	5.501 kg / 1000 pieces

SCREWERK	**STP310500450B**	
Metric Drawing A4	Scale 2:1	2024-10