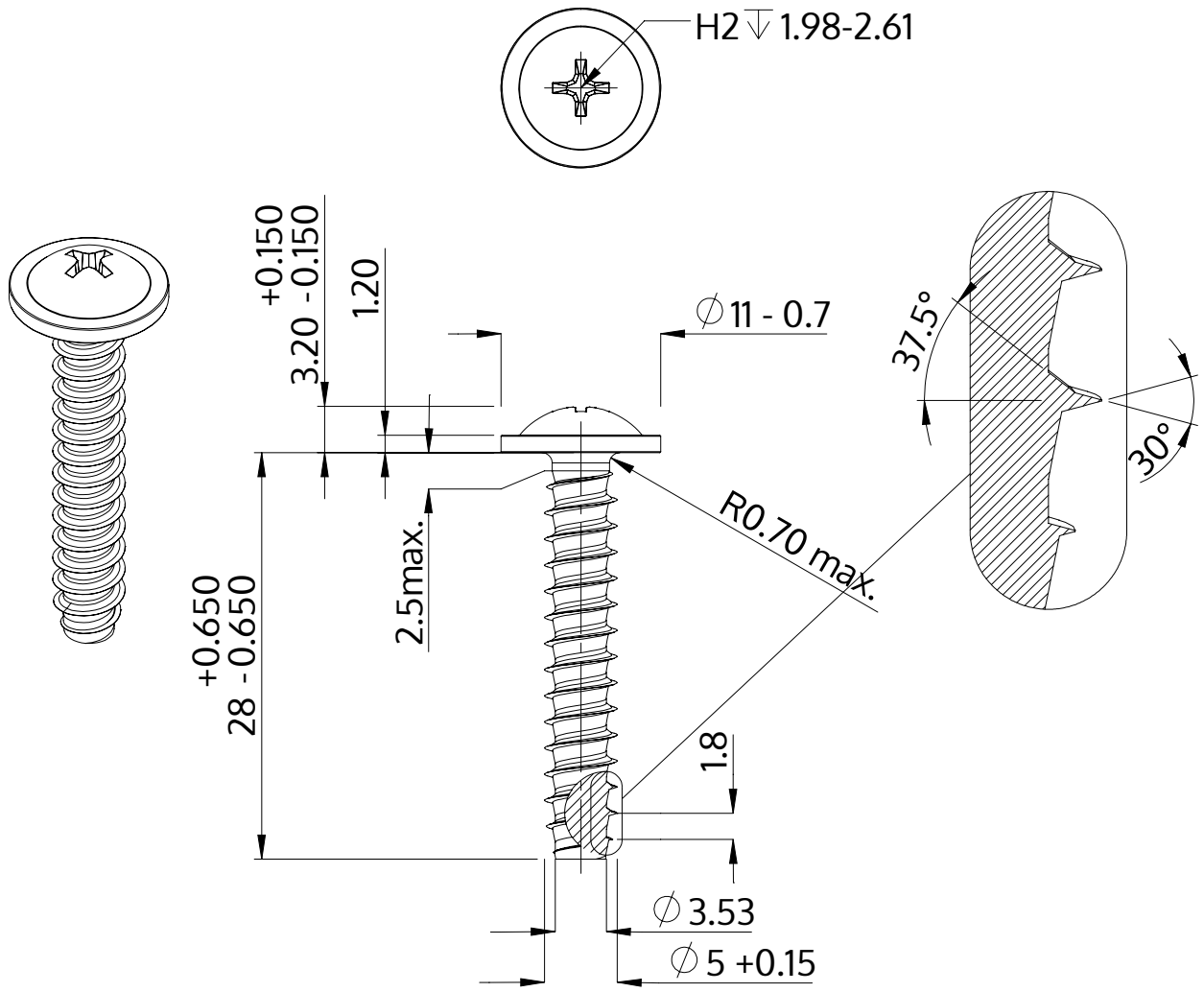

Description	STP31 5.0x28.0 - H2
Material	steel, hardened
Surface	zinc-plated 5-7 µm, baked, blue / transparent passivated
Weight	3.911 kg / 1000 pieces

SCREWERK	**STP310500280S**	
Metric Drawing A4	Scale 2:1	2024-10