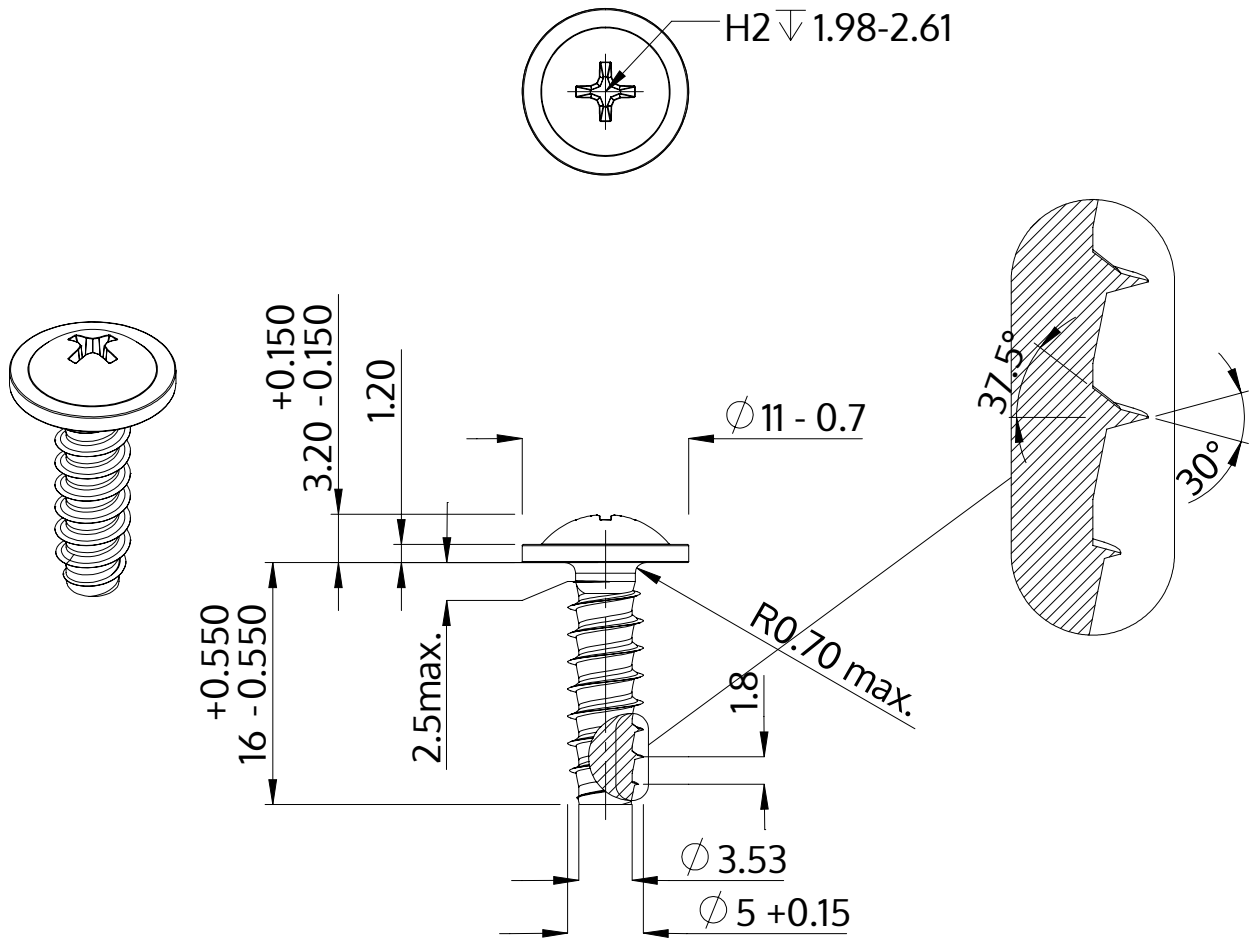

Description	STP31 5.0x16.0 - H2
Material	stainless steel A4
Surface	bright, pickled and passivated
Weight	2.789 kg / 1000 pieces

SCREWERK	**STP310500160C**	
Metric Drawing A4	Scale 2:1	2024-10