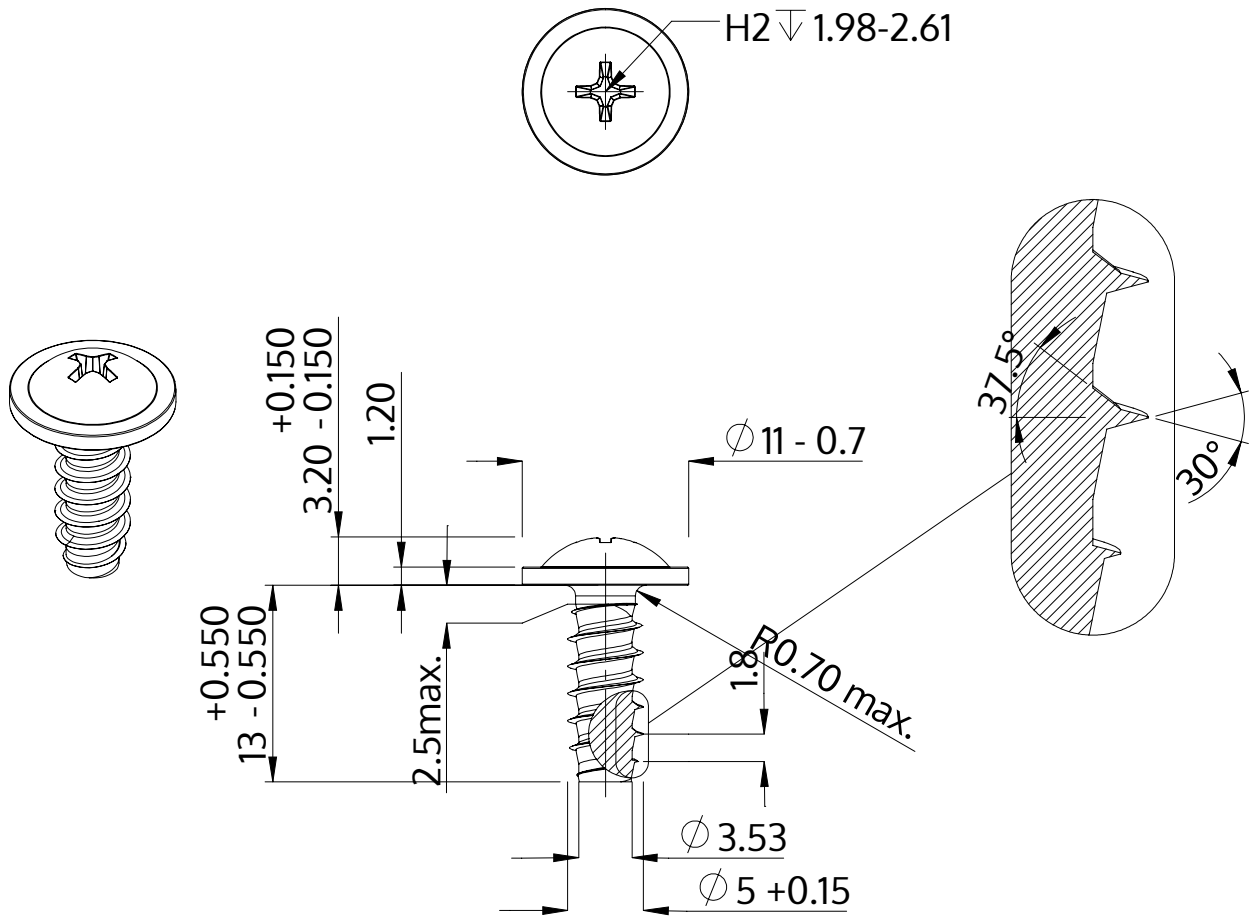

Description	STP31 5.0x13.0 - H2
Material	stainless-steel A2
Surface	bright, pickled and passivated
Weight	2.509 kg / 1000 pieces

SCREWERK	**STP310500130E**	
Metric Drawing A4	Scale None:1	2024-04