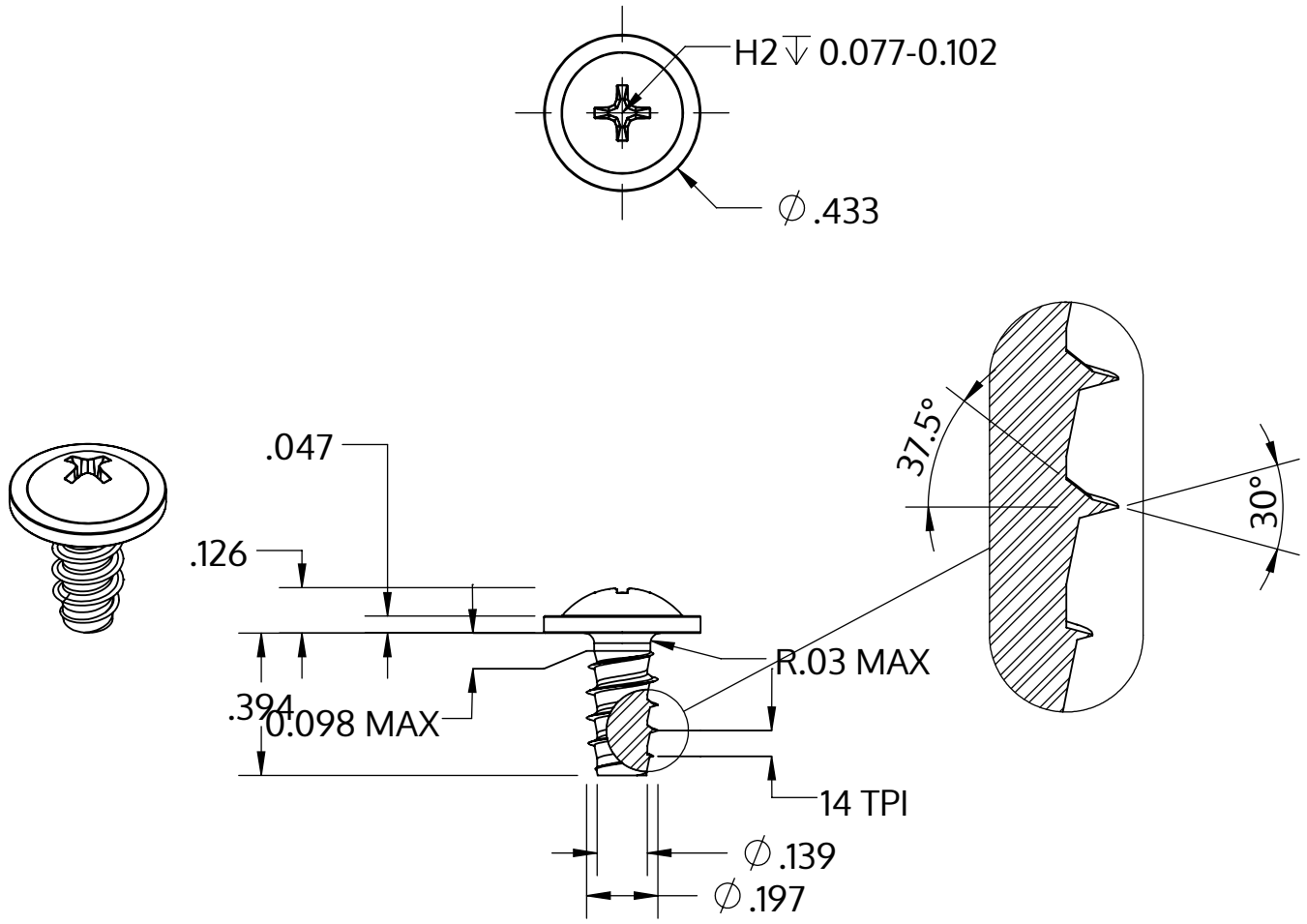

Metric size	M5 x 1.8 mm
US size (converted)	#11-14
	Tolerances [inch]
Length	+/- 0.017
Head diameter	+0 / -0.027
Head height	+/- 0.005
Thread diameter	+0.005 / -0

Descriere	STP31 5.0x10.0 - H2
Material	oțel, călit
Exterior	zincat 5-7 µm, recopt, pasivat transparent/albastru
Greutate	2.228 kg / 1000 unități

SCREWERK	**STP310500100S**	
_Zoll Zeichnung Größe A	Scalarea None:1	2024-04