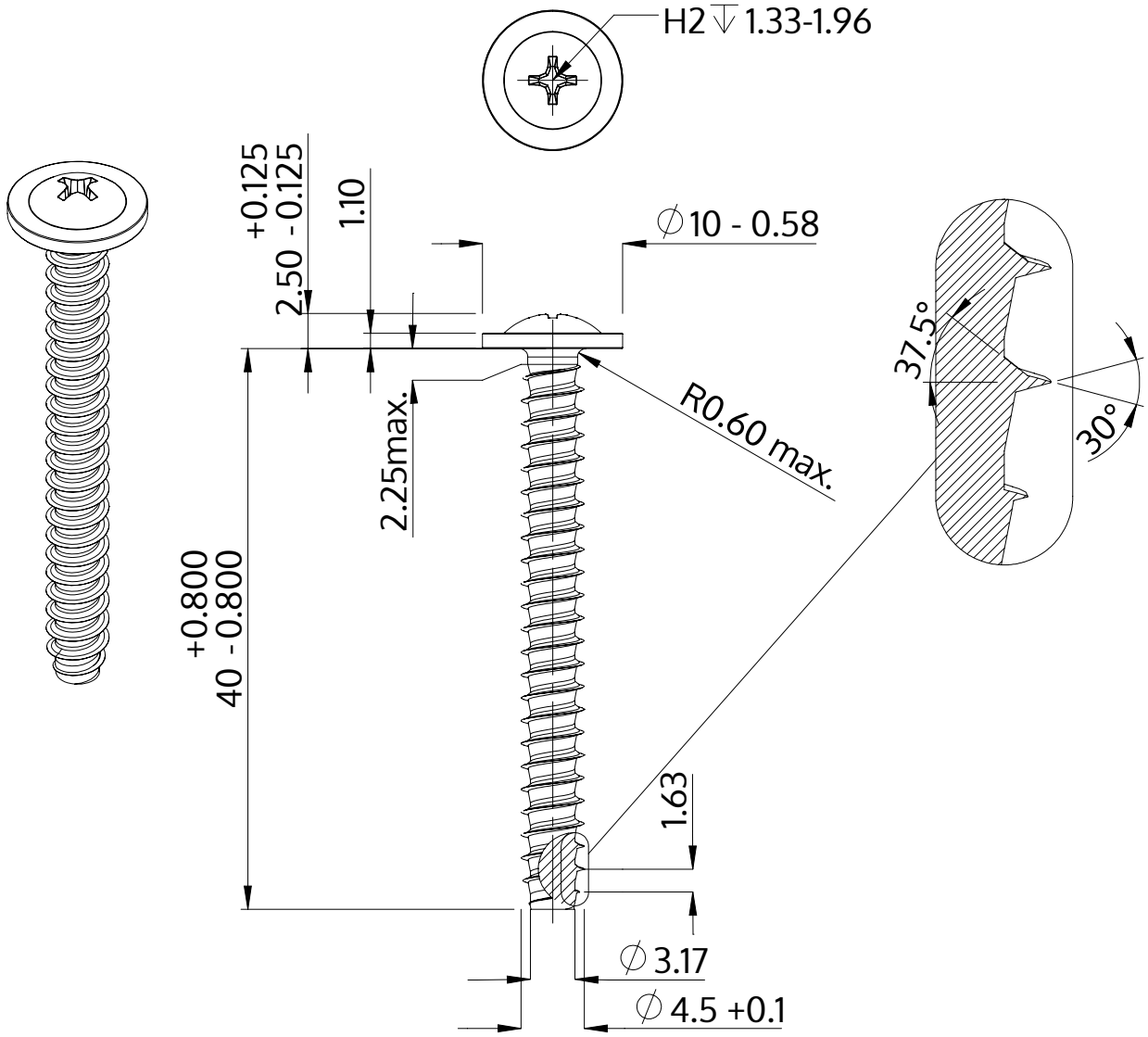

Description	STP31 4.5x40.0 - H2
Material	steel, hardened
Surface	zinc-plated 5-7 µm, baked, blue / transparent passivated
Weight	3.810 kg / 1000 pieces

SCREWERK	**STP310450400S**	
Metric Drawing A4	Scale None:1	2024-04