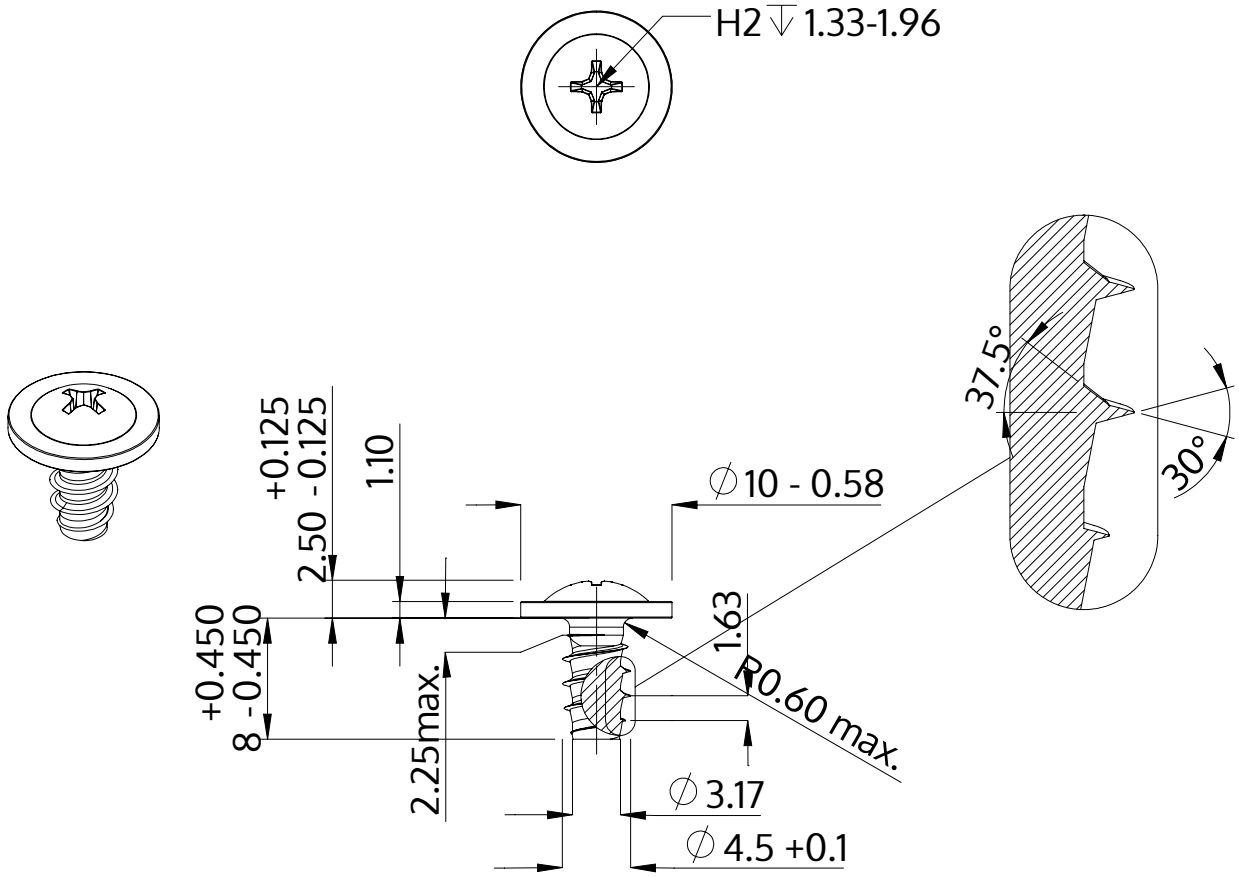

Description	STP31 4.5x8.0 - H2
Material	stainless-steel A2
Surface	bright, pickled and passivated
Weight	1.350 kg / 1000 pieces

SCREWERK	**STP310450080E**	
Metric Drawing A4	Scale None:1	2024-04