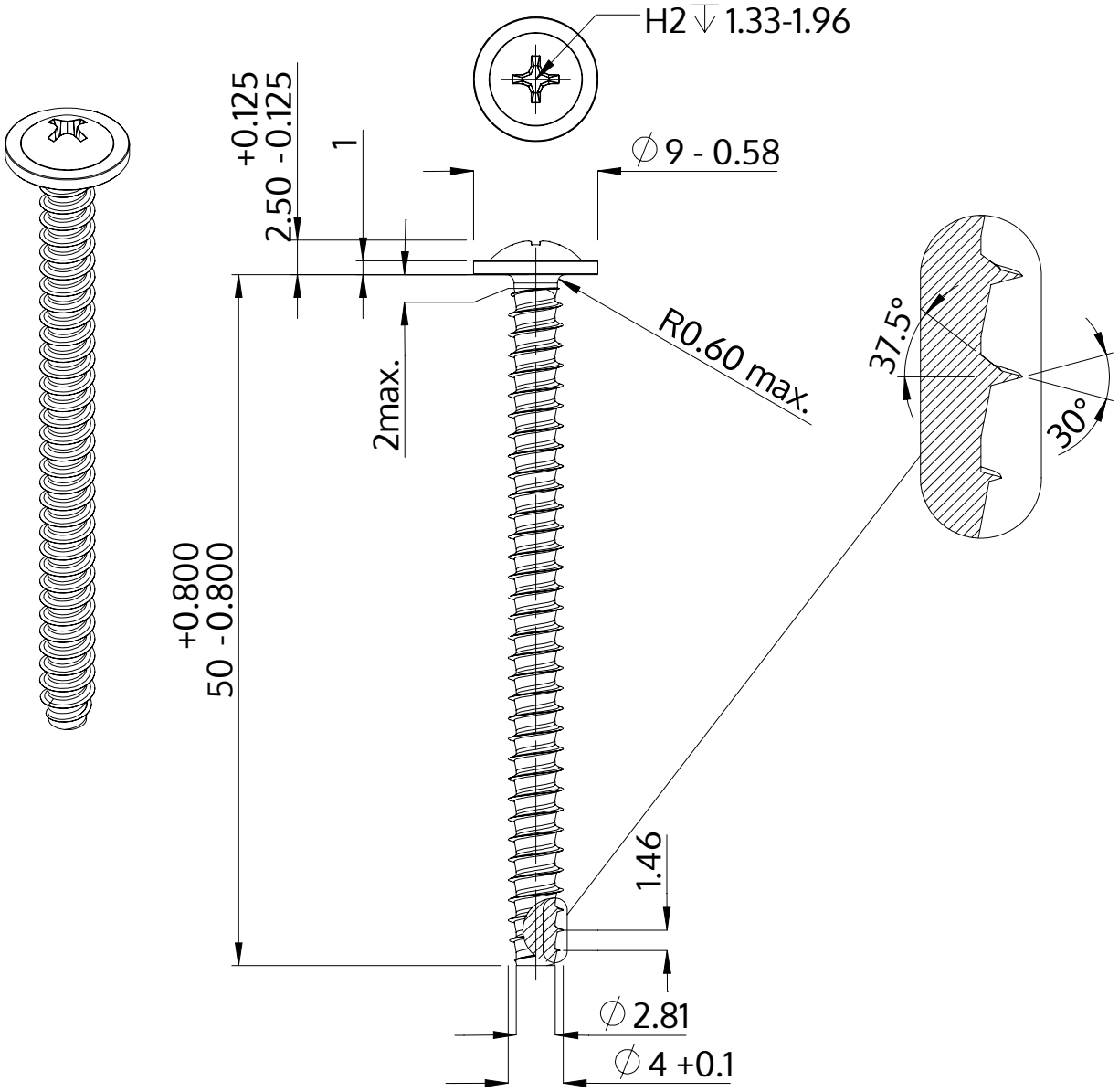

Description	STP31 4.0x50.0 - H2
Material	steel, hardened
Surface	Zinc-Nickel-plated min. 5µm, passivated black/ Cr-VI-free, baked, sealed
Weight	3.658 kg / 1000 pieces

SCREWERK	**STP310400500B**	
Metric Drawing A4	Scale 2:1	2024-10