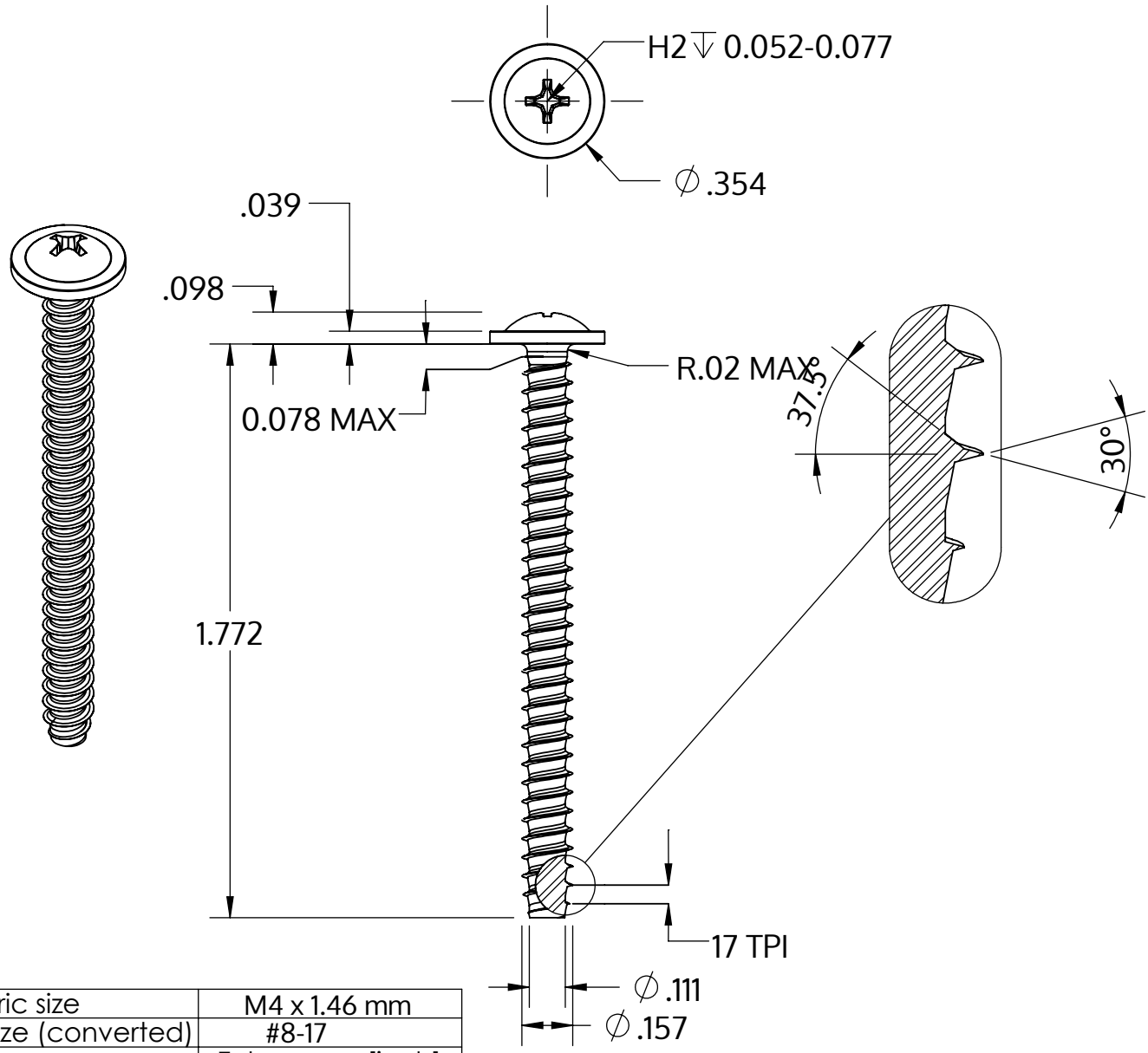

Metric size	M4 x 1.46 mm
US size (converted)	#8-17
	Tolerances [inch]
Length	+/- 0.031
Head diameter	+0 / -0.022
Head height	+/- 0.004
Thread diameter	+0.003 / -0

Description	STP31 4.0x45.0 - H2
Material	stainless-steel A2
Surface	bright, pickled and passivated
Weight	3.361 kg / 1000 pieces

SCREWERK	**STP310400450E**	
Inch Drawing Size A	Scale 2:1	2024-10