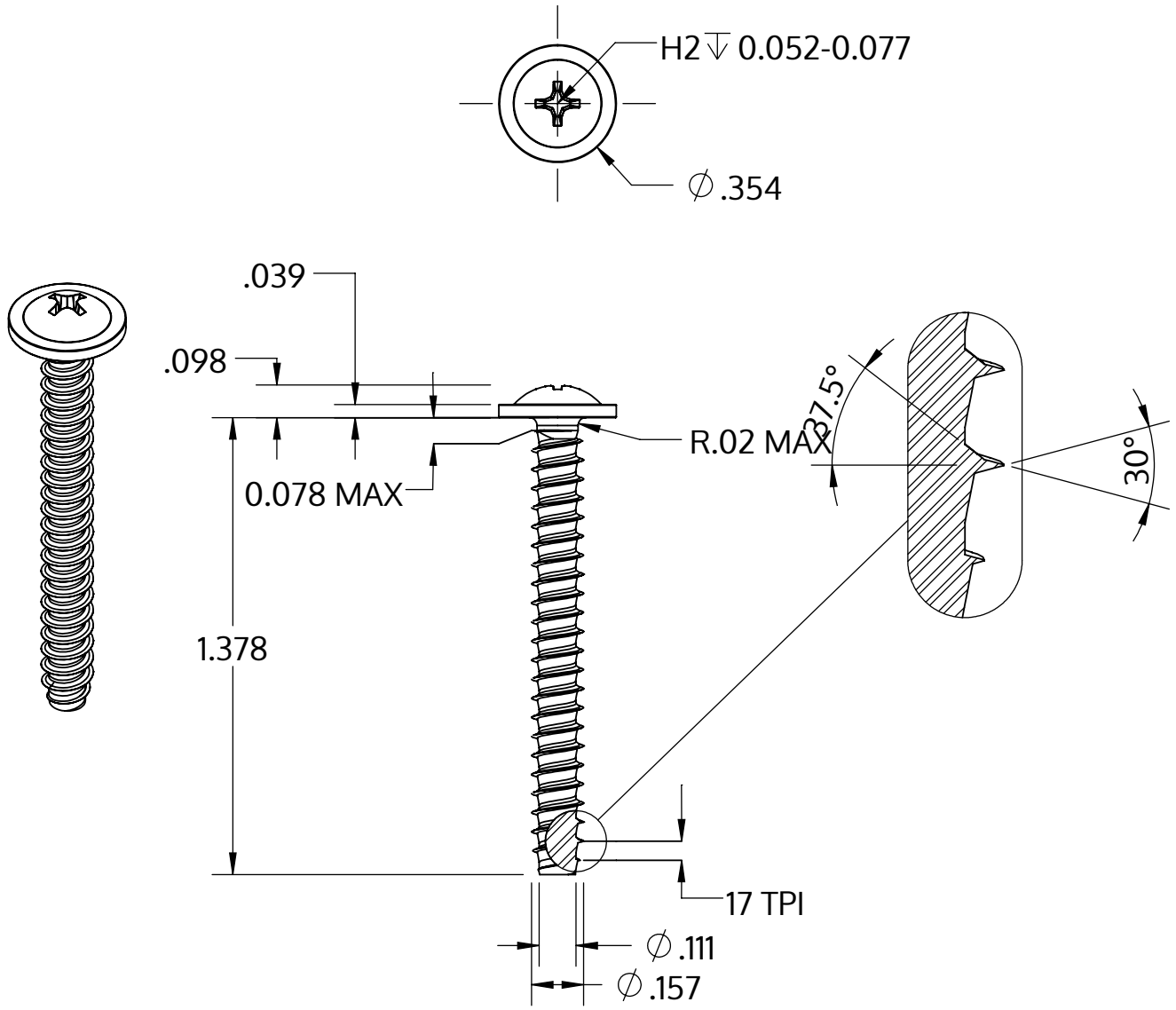


| | |
|---|---|
| Metric size | M4 x 1.46 mm |
| US size (converted) | #8-17 |
| | Tolerances [inch] |
| Length | +/- 0.031 |
| Head diameter | +0 / -0.022 |
| Head height | +/- 0.004 |
| Thread diameter | +0.003 / -0 |

| | |
|---|---|
| Beskrivning | STP31 4.0x35.0 - H2 |
| Material | stål, härdat |
| Yta | förzinkad 5-7 µm, härdad, blå/transparent passiviserad |
| Vikt | 2.765 kg / 1000 styck |

| | | |
|---|---|---|
| SCREWERK | **STP310400350S** | |
| _Zoll Zeichnung Größe A | Skala 2:1 | 2024-10 |