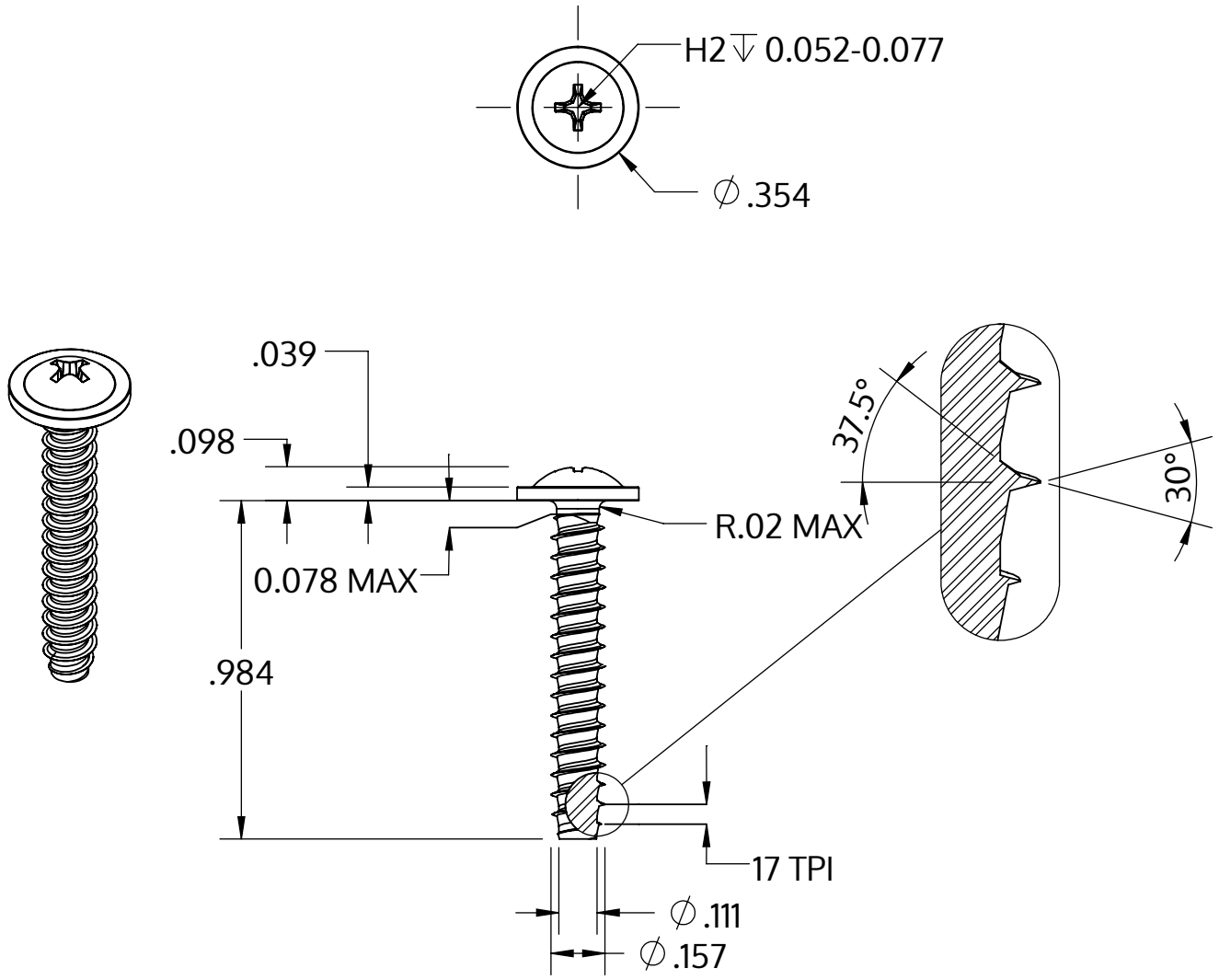


| | |
|---|---|
| Metric size | M4 x 1.46 mm |
| US size (converted) | #8-17 |
| | Tolerances [inch] |
| Length | +/- 0.025 |
| Head diameter | +0 / -0.022 |
| Head height | +/- 0.004 |
| Thread diameter | +0.003 / -0 |

| | |
|---|---|
| Beschrijving | STP31 4.0x25.0 - H2 |
| Materiaal | veredeld staal |
| Oppervlak | ZnNi zwart-gepassiveerd, getempert, verzegeld |
| Gewicht | 2.170 kg / 1000 stuk |

| | | |
|---|---|---|
| SCREWERK | **STP310400250B** | |
| _Zoll Zeichnung Größe A | Schaal 2:1 | 2024-10 |