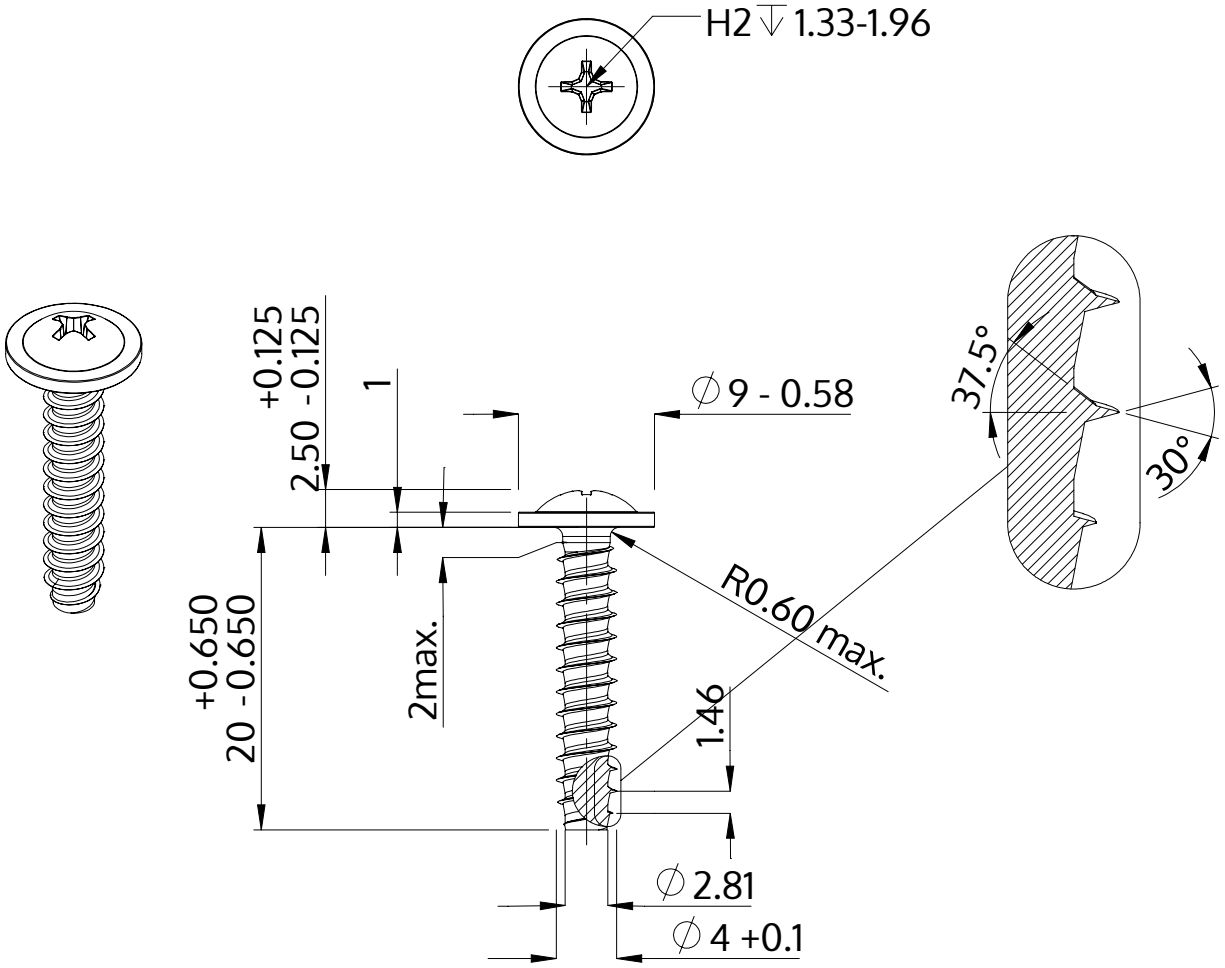

Description	STP31 4.0x20.0 - H2
Material	steel, hardened
Surface	Zinc-Nickel-plated min. 5µm, passivated black/ Cr-VI-free, baked, sealed
Weight	1.872 kg / 1000 pieces

SCREWERK	**STP310400200B**	
Metric Drawing A4	Scale None:1	2024-04