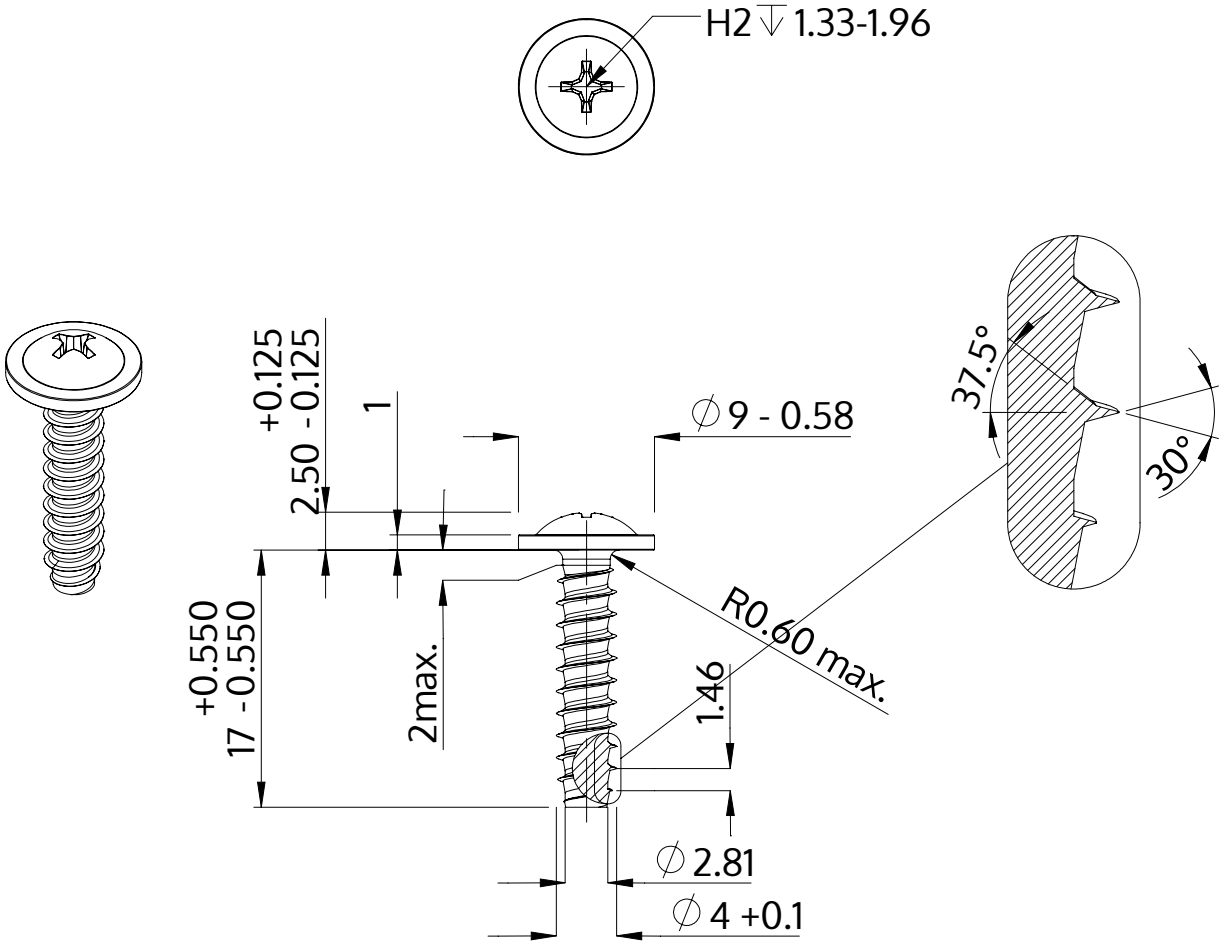

Description	STP31 4.0x17.0 - H2
Material	stainless steel A4
Surface	bright, pickled and passivated
Weight	1.694 kg / 1000 pieces

SCREWERK	**STP310400170C**	
Metric Drawing A4	Scale 2:1	2024-10