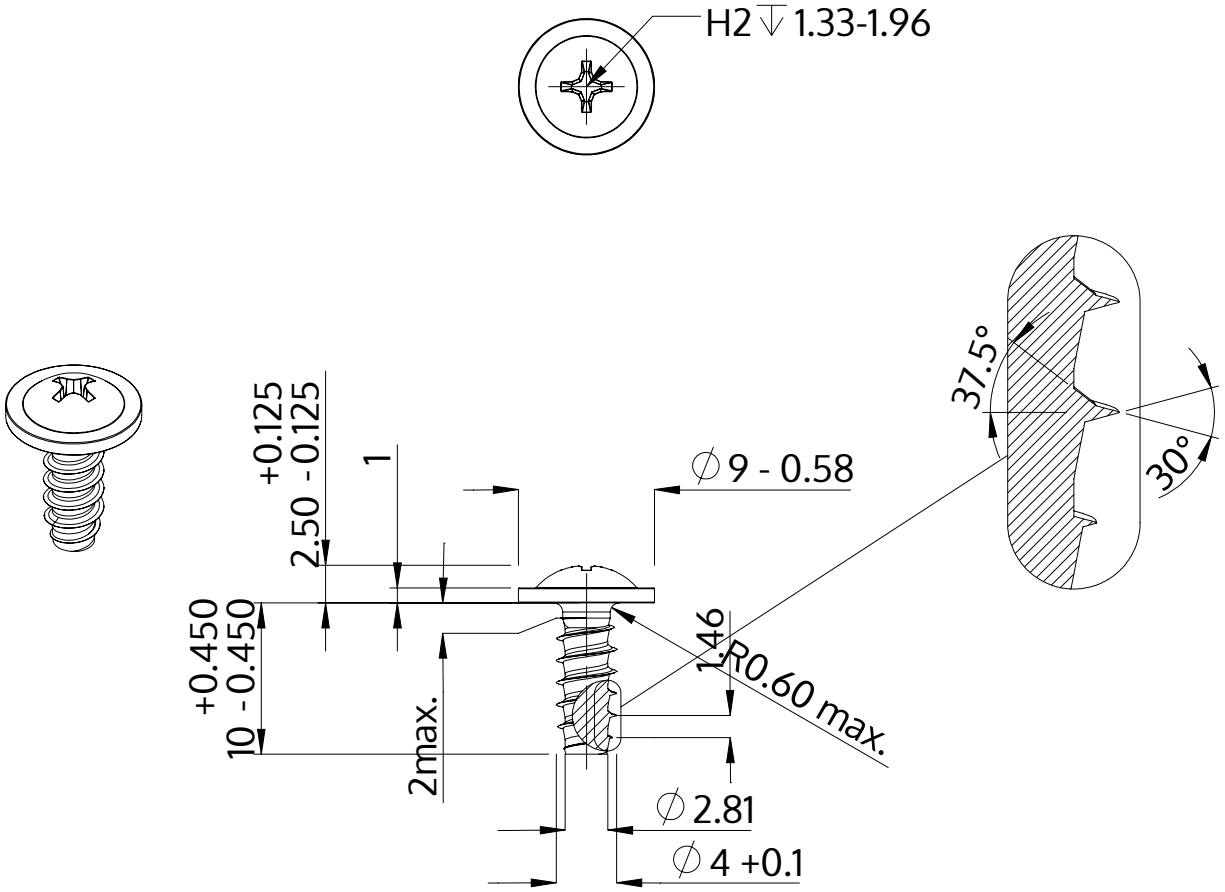

Description	STP31 4.0x10.0 - H2
Material	stainless steel A4
Surface	bright, pickled and passivated
Weight	1.277 kg / 1000 pieces

SCREWERK	**STP310400100C**	
Metric Drawing A4	Scale None:1	2024-04