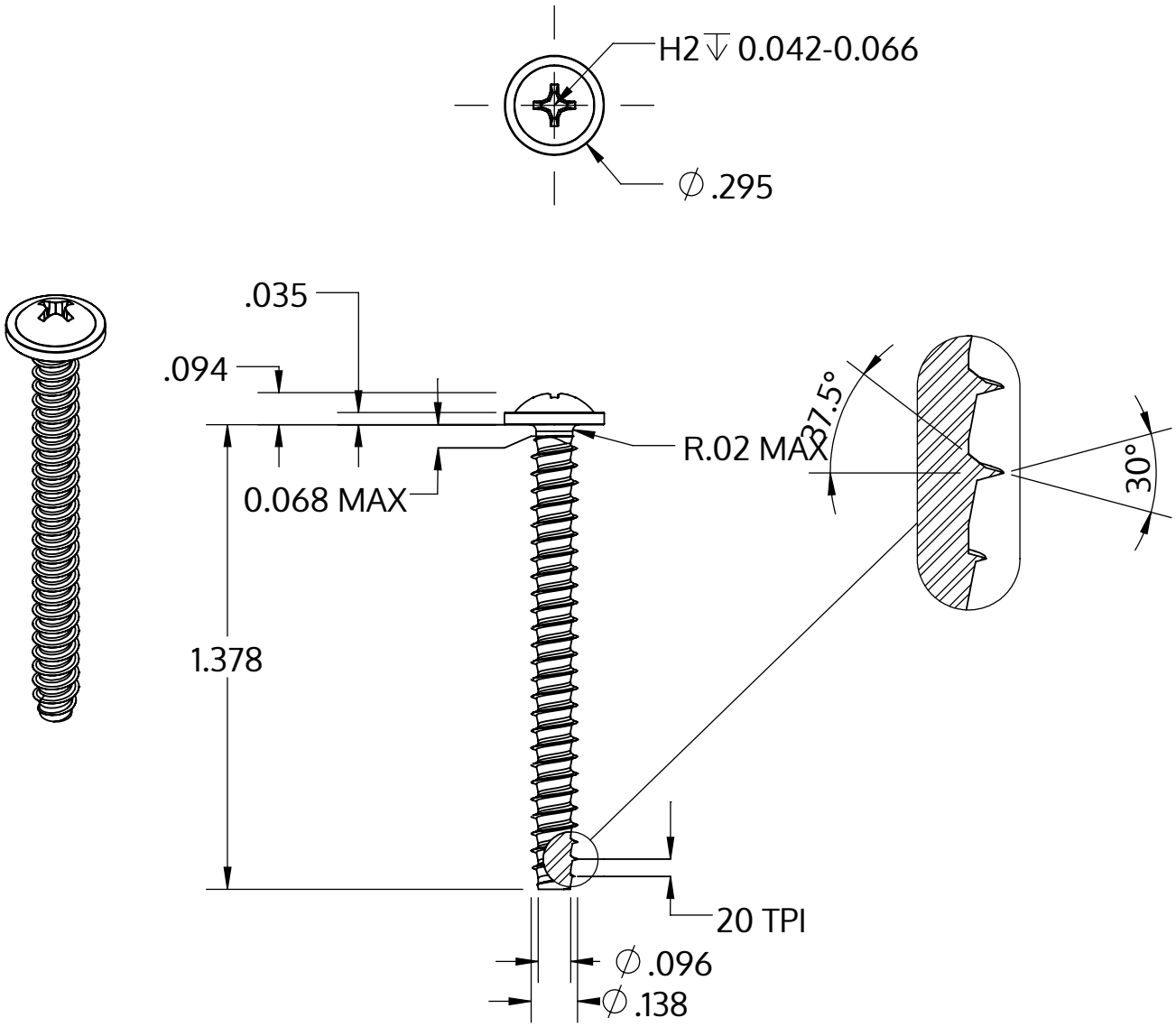


| | |
|---|---|
| Metric size | M3.5 x 1.29 mm |
| US size (converted) | #6-20 |
| | Tolerances [inch] |
| Length | +/- 0.031 |
| Head diameter | +0 / -0.022 |
| Head height | +/- 0.004 |
| Thread diameter | +0.003 / -0 |

| | |
|---|---|
| Popis | STP31 3.5x35.0 - H2 |
| Materiál | Nerezová ocel A4 |
| Povrch | holá, mořená a pásová ocel |
| Hmotnost | 2.082 kg / 1000 Kus |

| | | |
|---|---|---|
| SCREWERK | **STP310350350C** | |
| _Zoll Zeichnung Größe A | Měřítko 2:1 | 2024-10 |