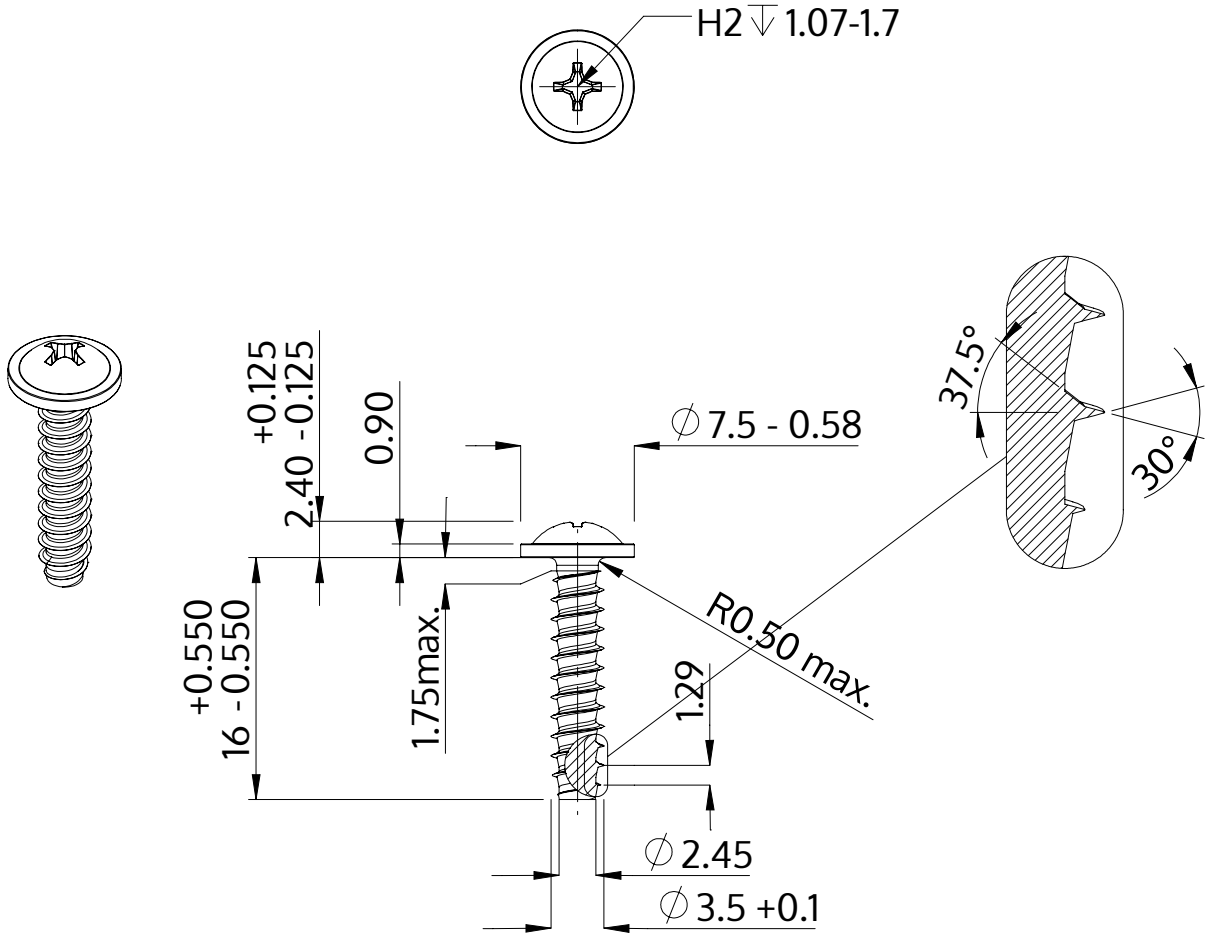

Description	STP31 3.5x16.0 - H2
Material	stainless steel A4
Surface	bright, pickled and passivated
Weight	1.185 kg / 1000 pieces

SCREWERK	**STP310350160C**	
Metric Drawing A4	Scale 2:1	2024-10