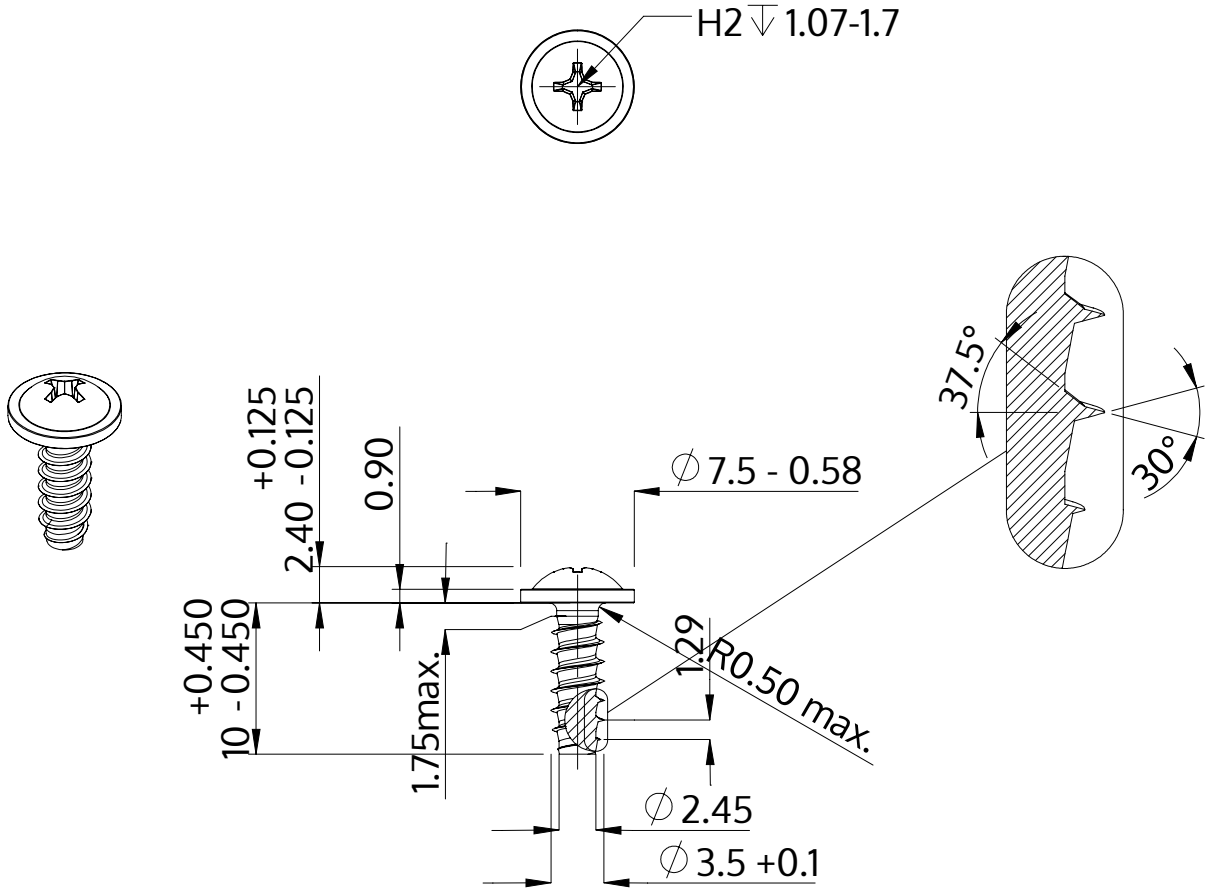

Description	STP31 3.5x10.0 - H2
Material	stainless-steel A2
Surface	bright, pickled and passivated
Weight	0.901 kg / 1000 pieces

SCREWERK	**STP310350100E**	
Metric Drawing A4	Scale 2:1	2024-10