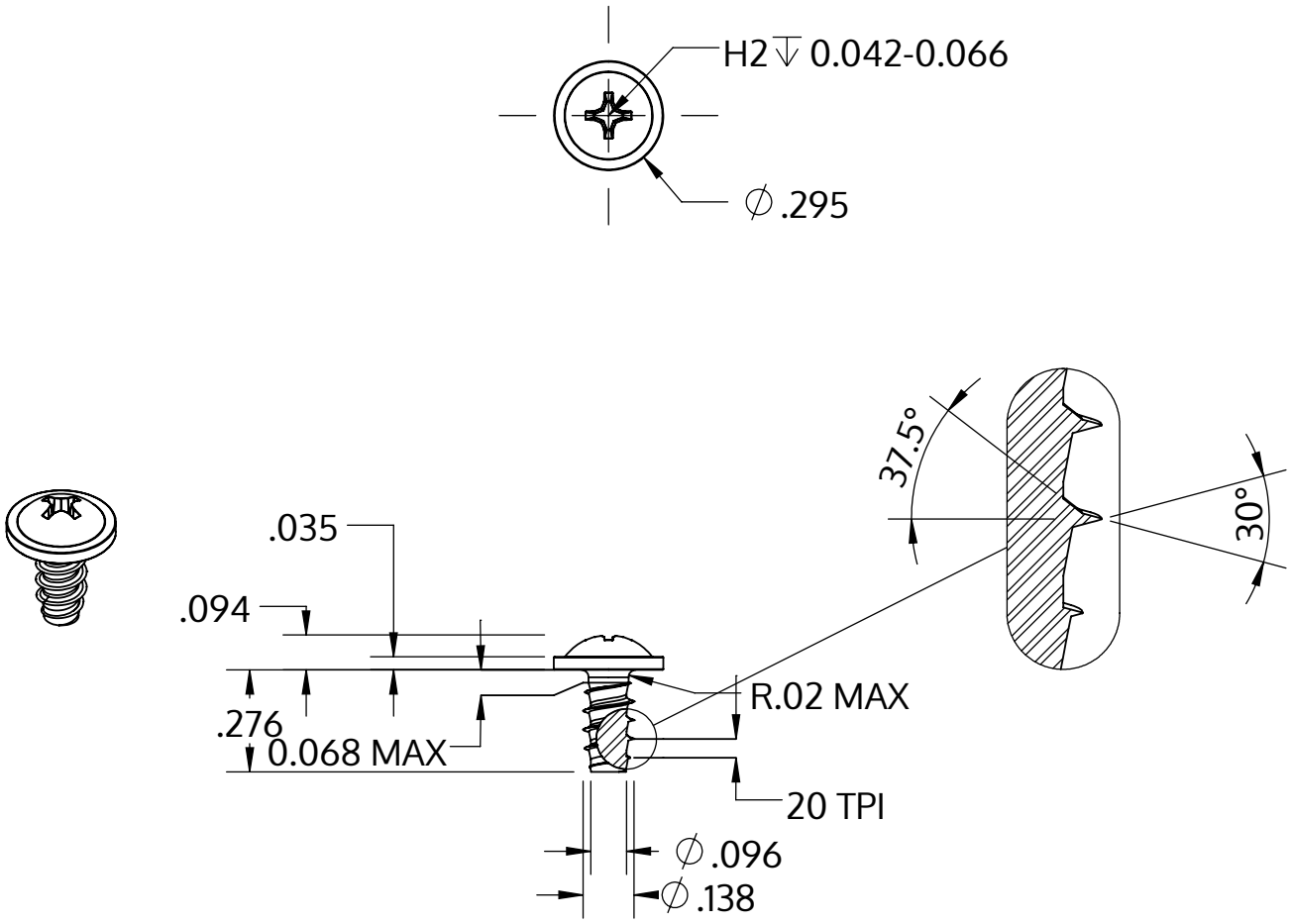

Metric size	M3.5 x 1.29 mm
US size (converted)	#6-20
	Tolerances [inch]
Length	+/- 0.017
Head diameter	+0 / -0.022
Head height	+/- 0.004
Thread diameter	+0.003 / -0

Descrizione	STP31 3.5x7.0 - H2
Materiale	acciaio inossidabile A4
Superficie	bianco-decapato e passivato
Peso	0.759 kg / 1000 pezzi

SCREWERK	**STP310350070C**	
_Zoll Zeichnung Größe A	Scala 2:1	2024-10