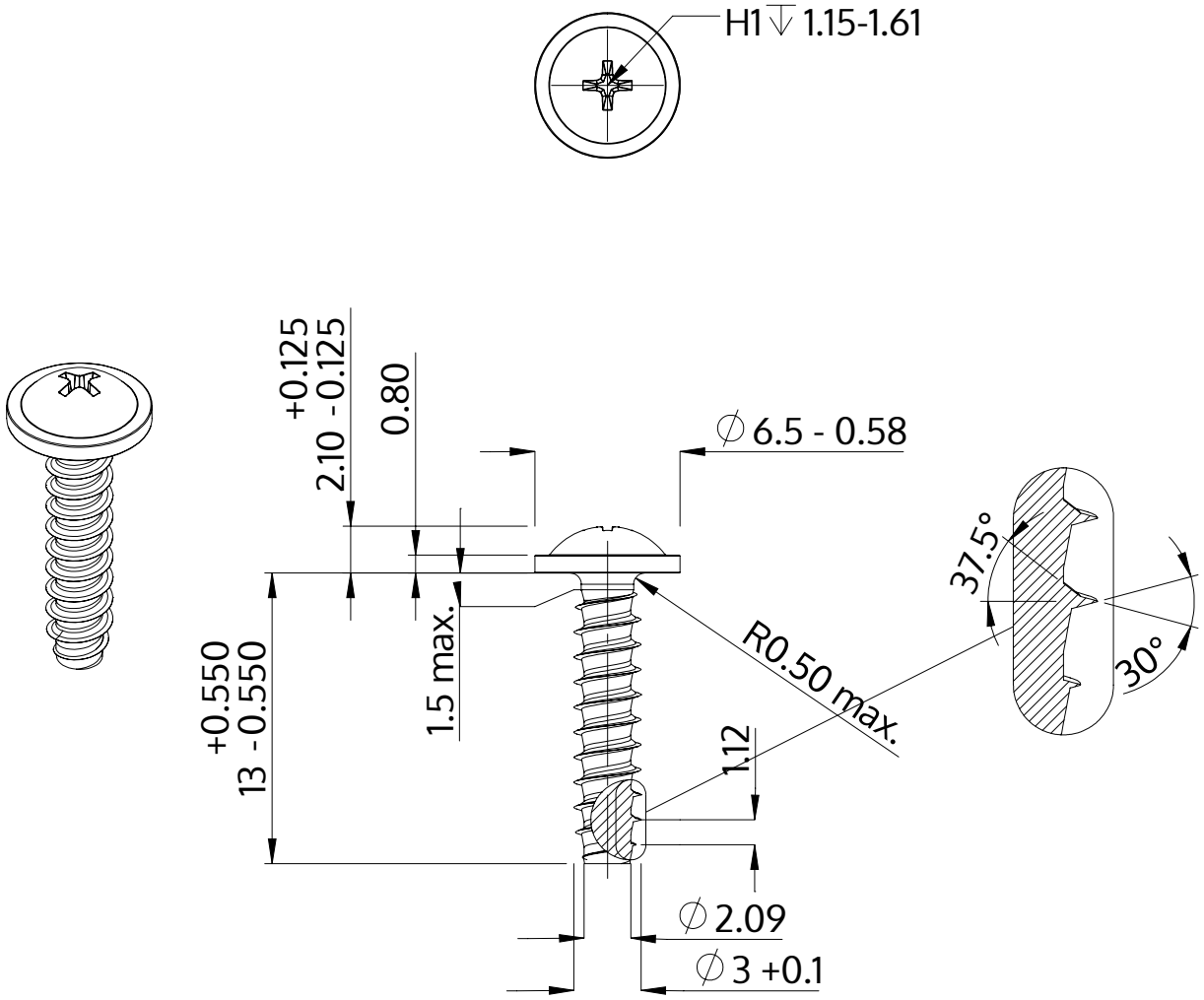

Description	STP31 3.0x13.0 - H1
Material	steel, hardened
Surface	zinc-plated 5-7 µm, baked, blue / transparent passivated
Weight	0.718 kg / 1000 pieces

SCREWERK	**STP310300130S**	
Metric Drawing A4	Scale None:1	2024-04