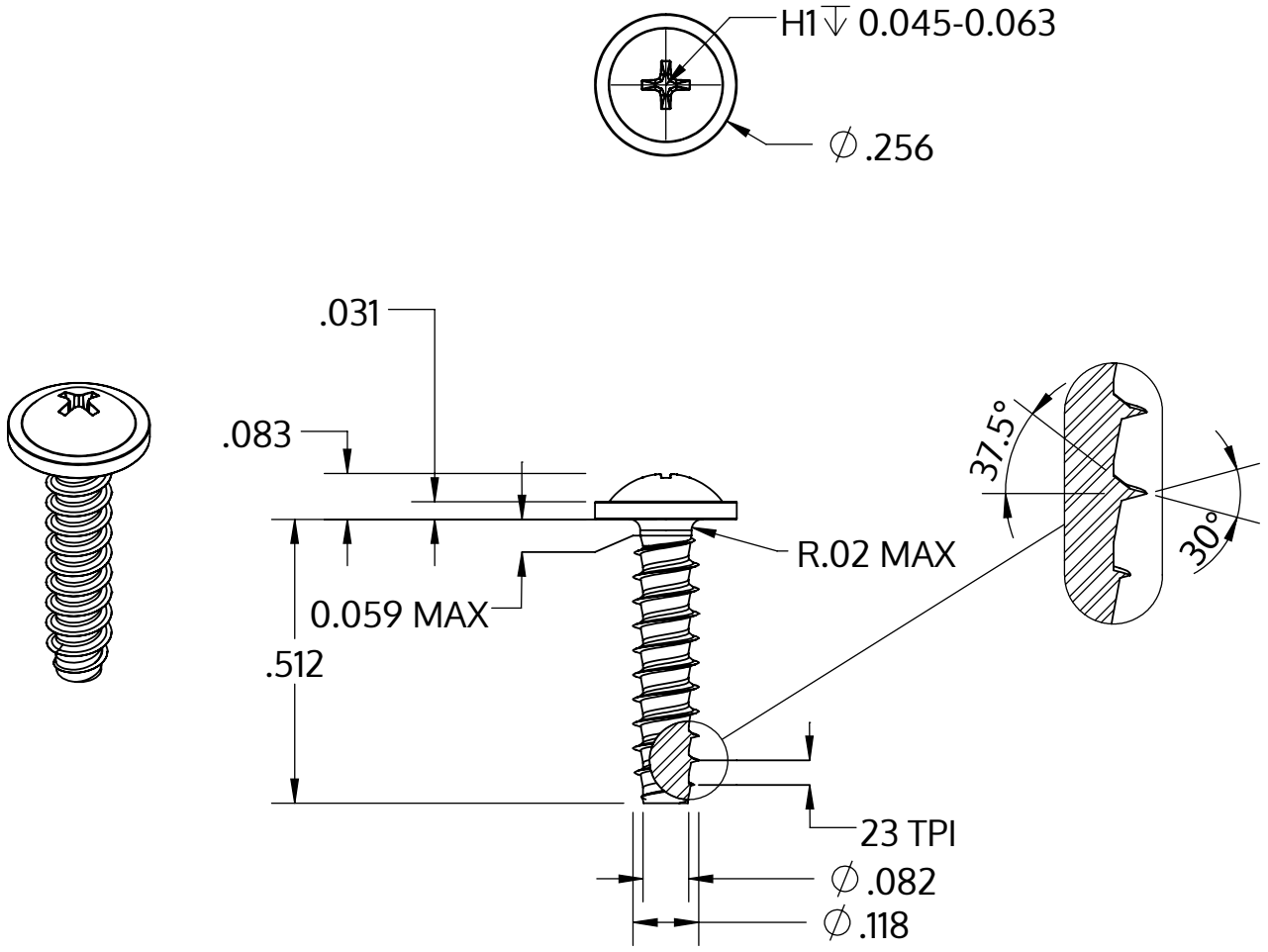

Metric size	M3 x 1.12 mm
US size (converted)	#4-23
	Tolerances [inch]
Length	+/- 0.021
Head diameter	+0 / -0.022
Head height	+/- 0.004
Thread diameter	+0.003 / -0

Descriere	STP31 3.0x13.0 - H1
Material	oțel, călit
Exterior	zincat, Nichelat, pasivat negru / nu conține Cr-VI, recopt, ermetizat
Greutate	0.718 kg / 1000 unități

SCREWERK	**STP310300130B**	
_Zoll Zeichnung Größe A	Scalarea None:1	2024-04