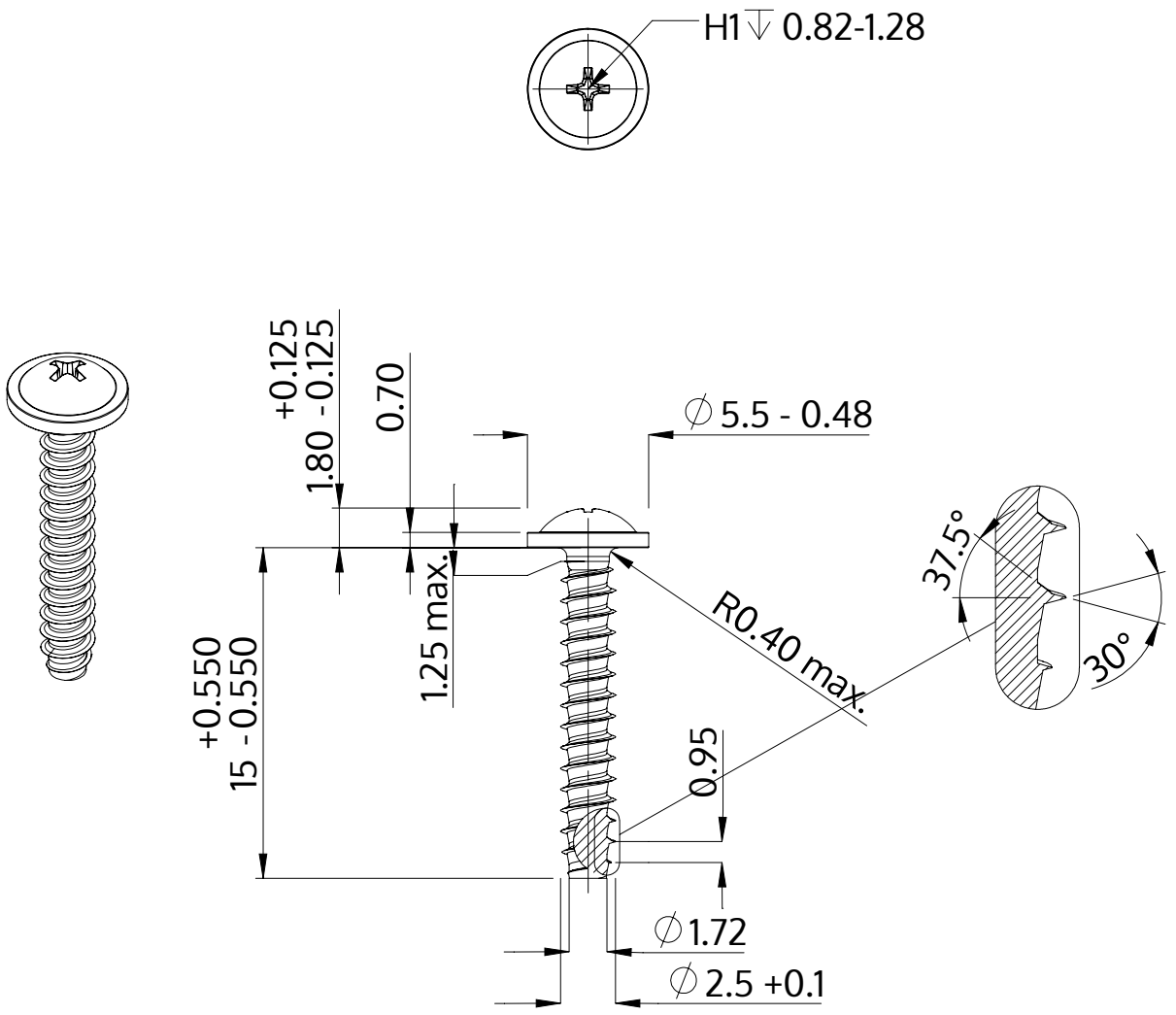

Description	STP31 2.5x15.0 - H1
Material	stainless steel A4
Surface	bright, pickled and passivated
Weight	0.532 kg / 1000 pieces

SCREWERK	**STP310250150C**	
Metric Drawing A4	Scale 3:1	2024-10