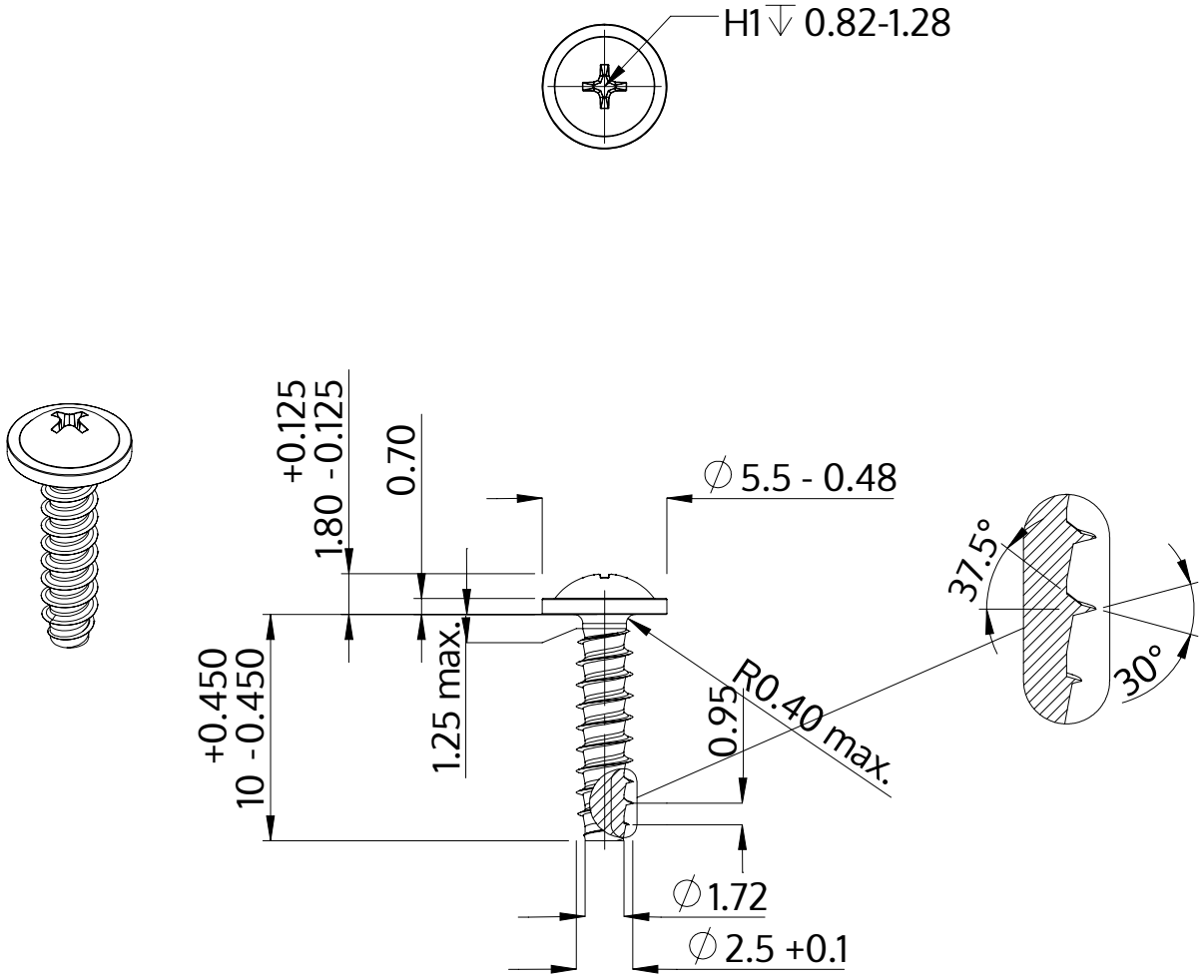

Description	STP31 2.5x10.0 - H1
Material	stainless steel A4
Surface	bright, pickled and passivated
Weight	0.412 kg / 1000 pieces

SCREWERK	**STP310250100C**	
Metric Drawing A4	Scale 3:1	2024-10