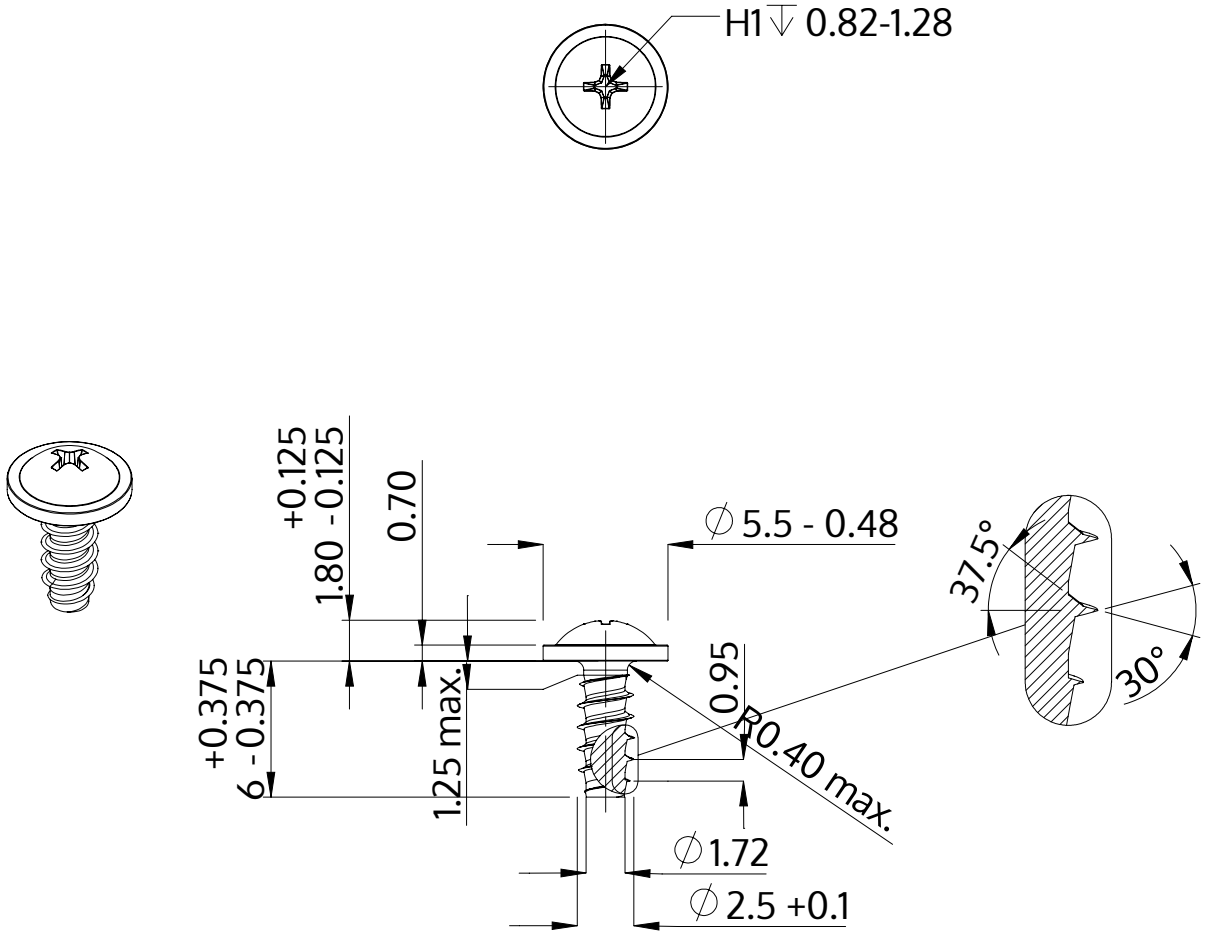

Description	STP31 2.5x6.0 - H1
Material	stainless steel A4
Surface	bright, pickled and passivated
Weight	0.316 kg / 1000 pieces

SCREWERK	**STP310250060C**	
Metric Drawing A4	Scale None:1	2024-04