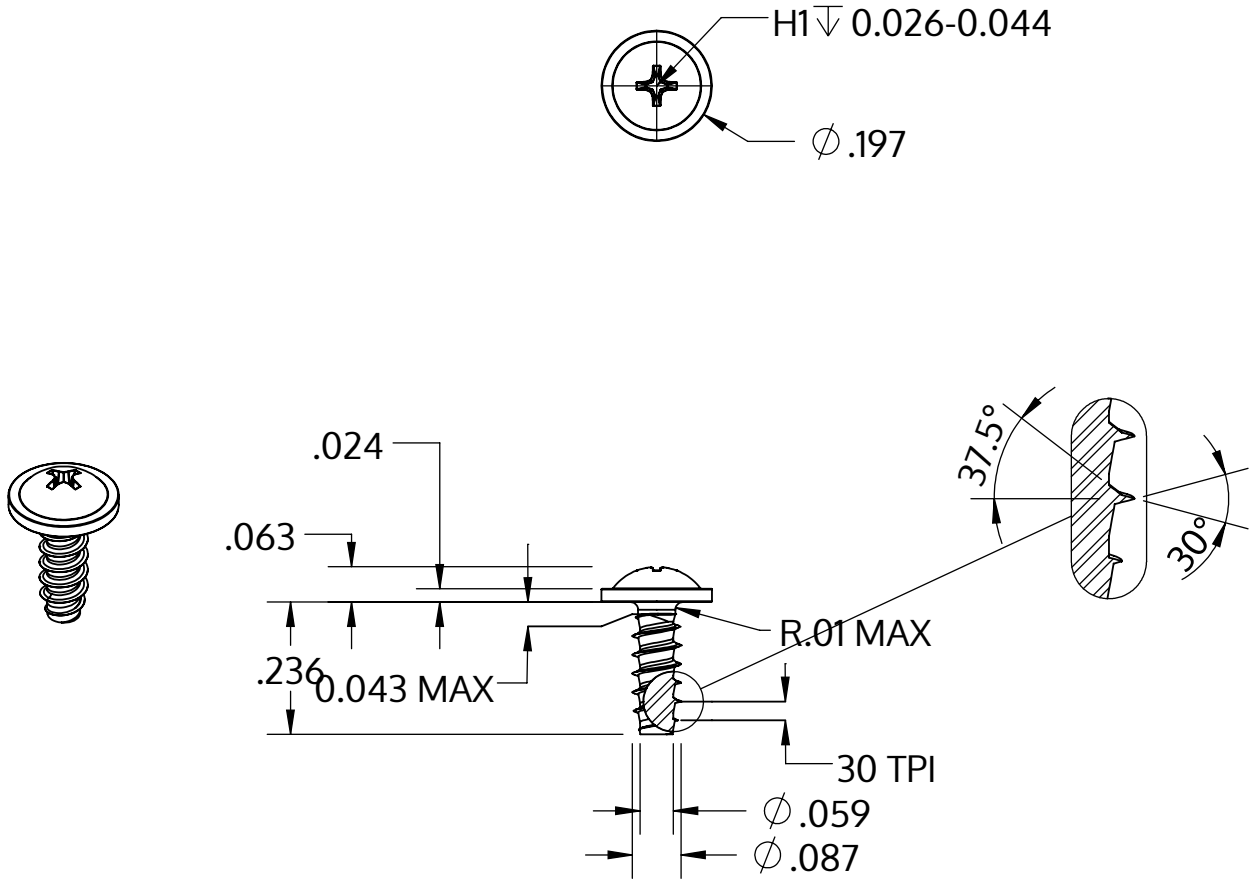

Metric size	M2.2 x 0.85 mm
US size (converted)	#2-30
	Tolerances [inch]
Length	+/- 0.014
Head diameter	+0 / -0.018
Head height	+/- 0.004
Thread diameter	+0.003 / -0

Description	STP31 2.2x6.0 - H1
Material	steel, hardened
Surface	Zinc-Nickel-plated min. 5µm, passivated black/ Cr-VI-free, baked, sealed
Weight	0.233 kg / 1000 pieces

SCREWERK	**STP310220060B**	
Inch Drawing Size A	Scale None:1	2024-04