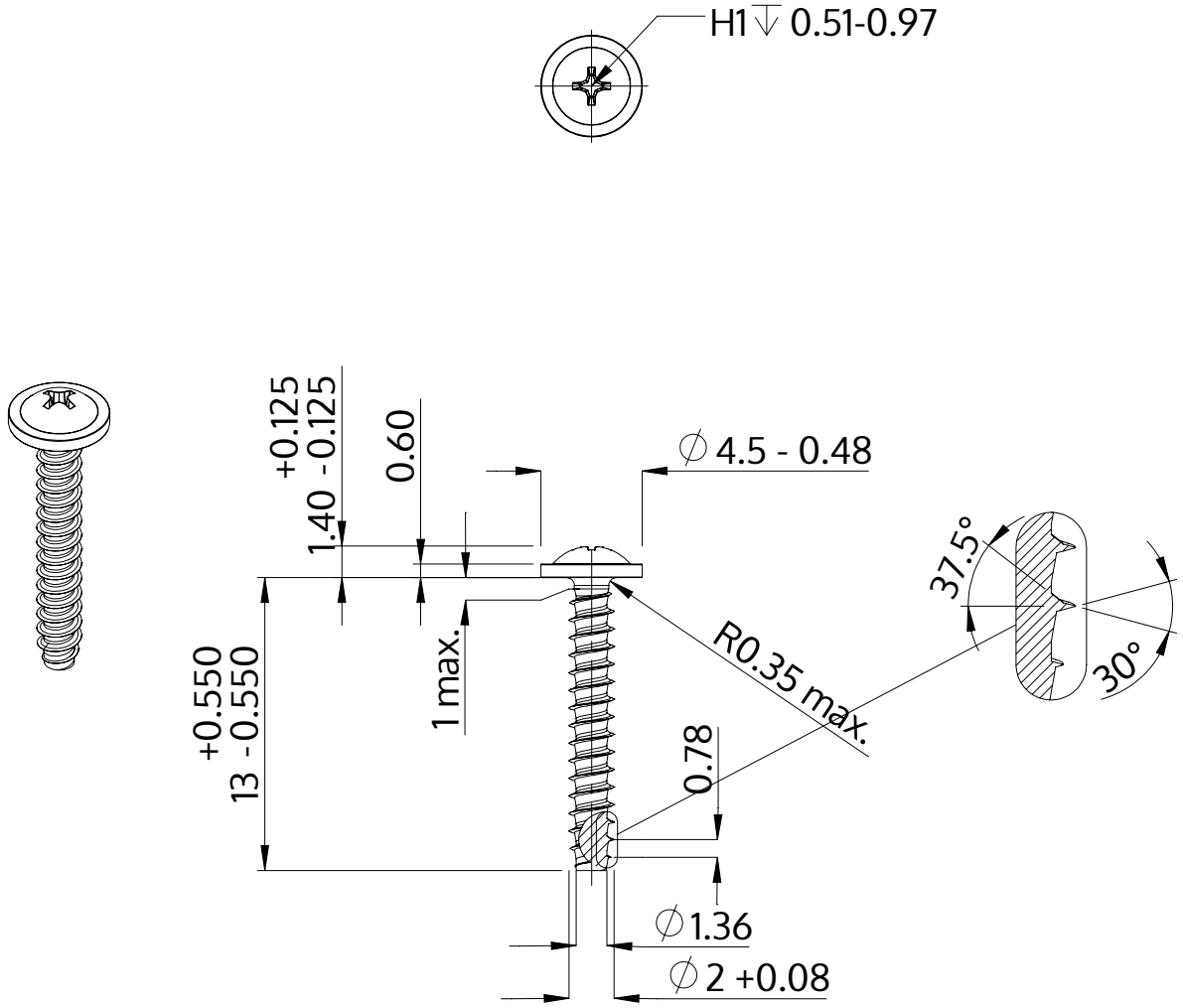

Description	STP31 2.0x13.0 - H1
Material	stainless-steel A2
Surface	bright, pickled and passivated
Weight	0.286 kg / 1000 pieces

SCREWERK	**STP310200130E**	
Metric Drawing A4	Scale None:1	2024-05