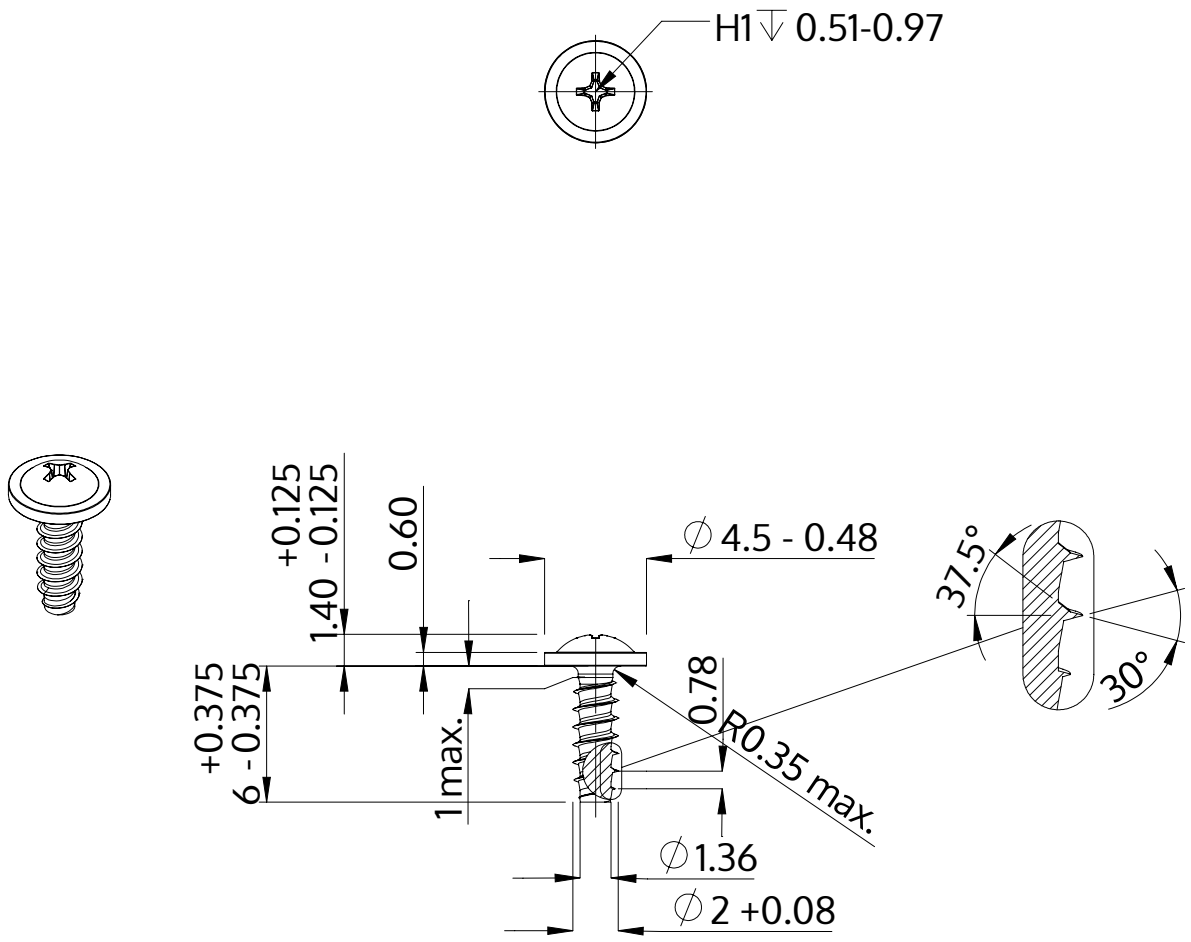

Description	STP31 2.0x6.0 - H1
Material	stainless-steel A2
Surface	bright, pickled and passivated
Weight	0.177 kg / 1000 pieces

SCREWERK	**STP310200060E**	
Metric Drawing A4	Scale 3:1	2024-10