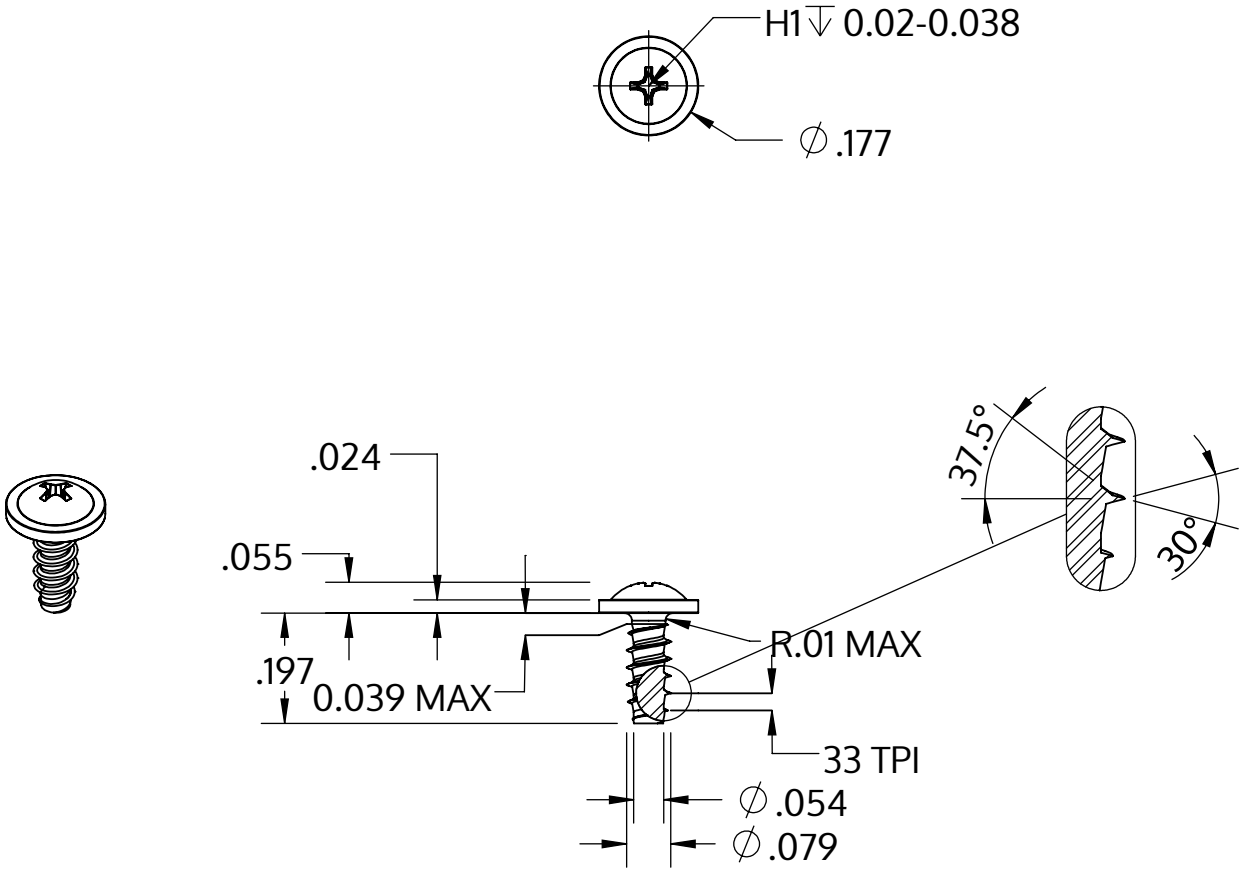


| | |
|---|---|
| Metric size | M2 x 0.78 mm |
| US size (converted) | #1.5-33 |
| | Tolerances [inch] |
| Length | +/- 0.014 |
| Head diameter | +0 / -0.018 |
| Head height | +/- 0.004 |
| Thread diameter | +0.003 / -0 |

| | |
|---|---|
| Beskrivning | STP31 2.0x5.0 - H1 |
| Material | stål, härdat |
| Yta | förzinkad 5-7 µm, härdad, blå/transparent passiviserad |
| Vikt | 0.161 kg / 1000 styck |

| | | |
|---|---|---|
| SCREWERK | **STP310200050S** | |
| _Zoll Zeichnung Größe A | Skala 3:1 | 2024-10 |