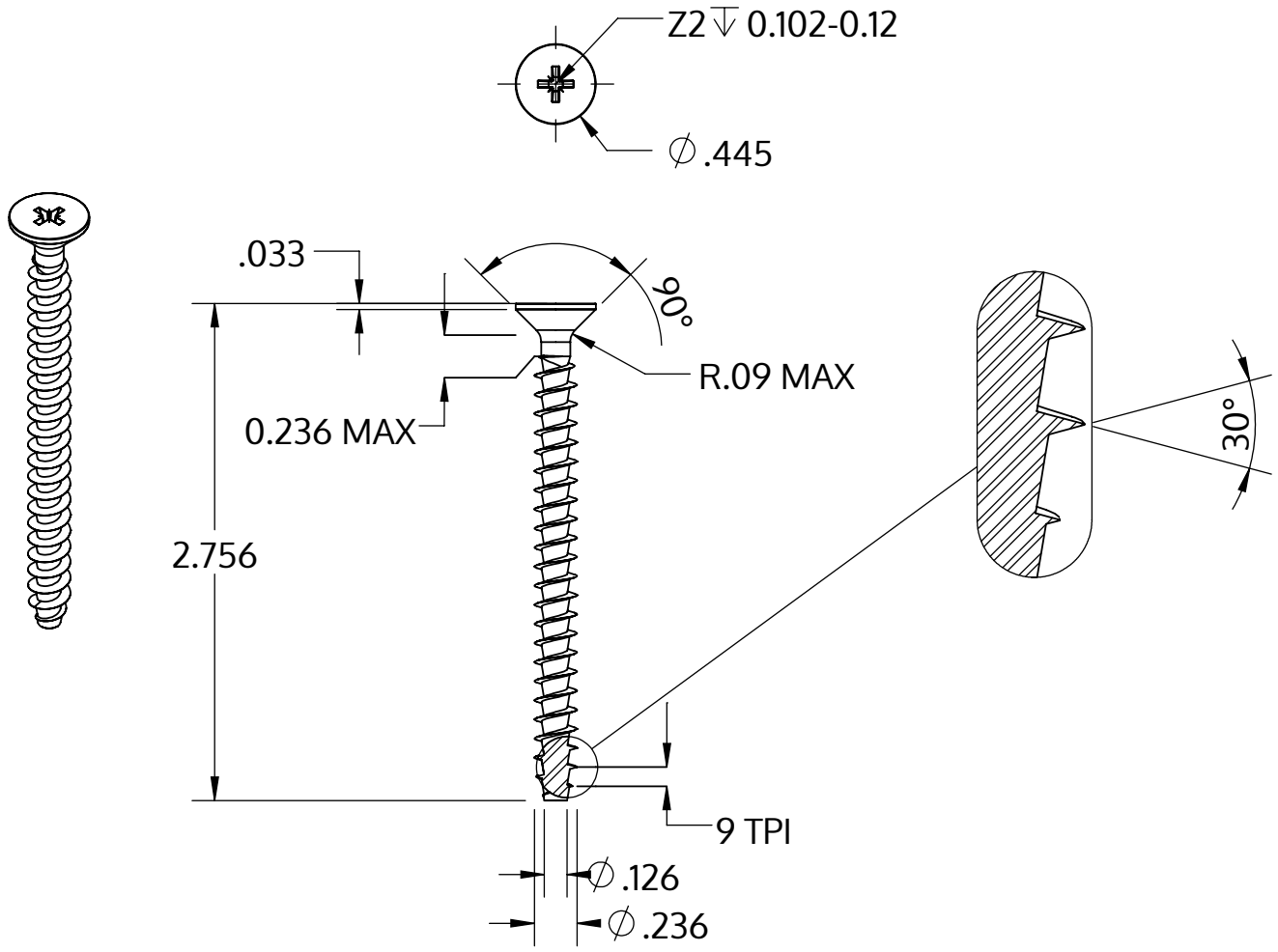


| | |
|---|---|
| Metric size | M6 x 2.69 mm |
| US size (converted) | #0.236-9 |
| | Tolerances [inch] |
| Length | +/- 0.037 |
| Head diameter | +0 / -0.016 |
| Head height | |
| Thread diameter | +0.007 / -0 |

| | |
|---|---|
| Descriere | STP23A 6.0x70.0 - Z2 |
| Material | oțel, călit |
| Exterior | zincat 5-7 µm, recopt, pasivat transparent/albastru |
| Greutate | 8.280 kg / 1000 unități |

| | | |
|---|---|---|
| SCREWERK | **STP23A0600700S** | |
| _Zoll Zeichnung Größe A | Scalarea None:1 | 2024-04 |