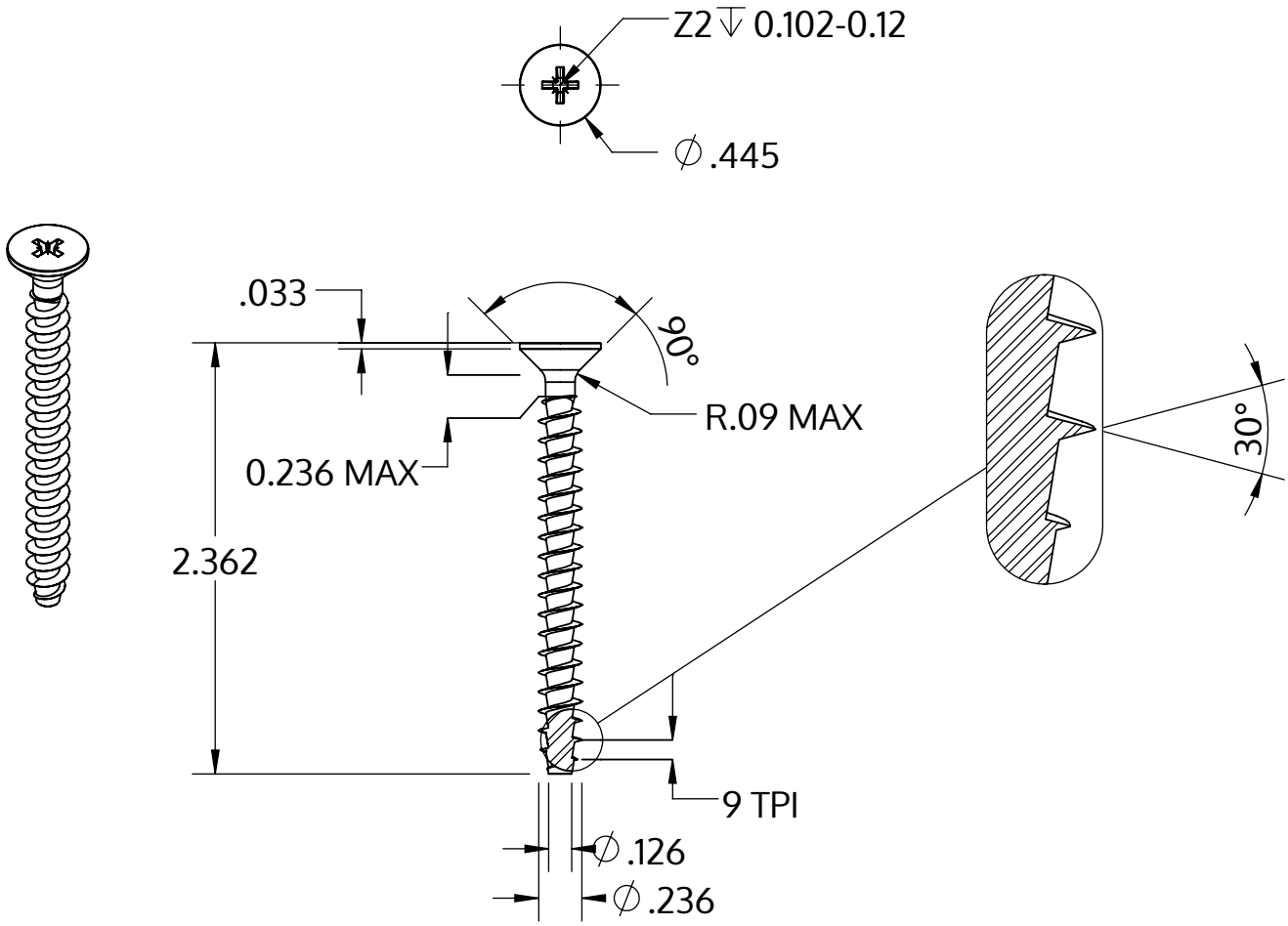

Metric size	M6 x 2.69 mm
US size (converted)	#0.236-9
	Tolerances [inch]
Length	+/- 0.037
Head diameter	+0 / -0.016
Head height	
Thread diameter	+0.007 / -0

Description	STP23A 6.0x60.0 - Z2
Matière	acier inoxydable A2
Surface	brillant décapé et passivé
Poids	7.259 kg / 1000 Unité

SCREWERK	**STP23A0600600E**	
_Zoll Zeichnung Größe A	Redimensionner 1:1	2024-10