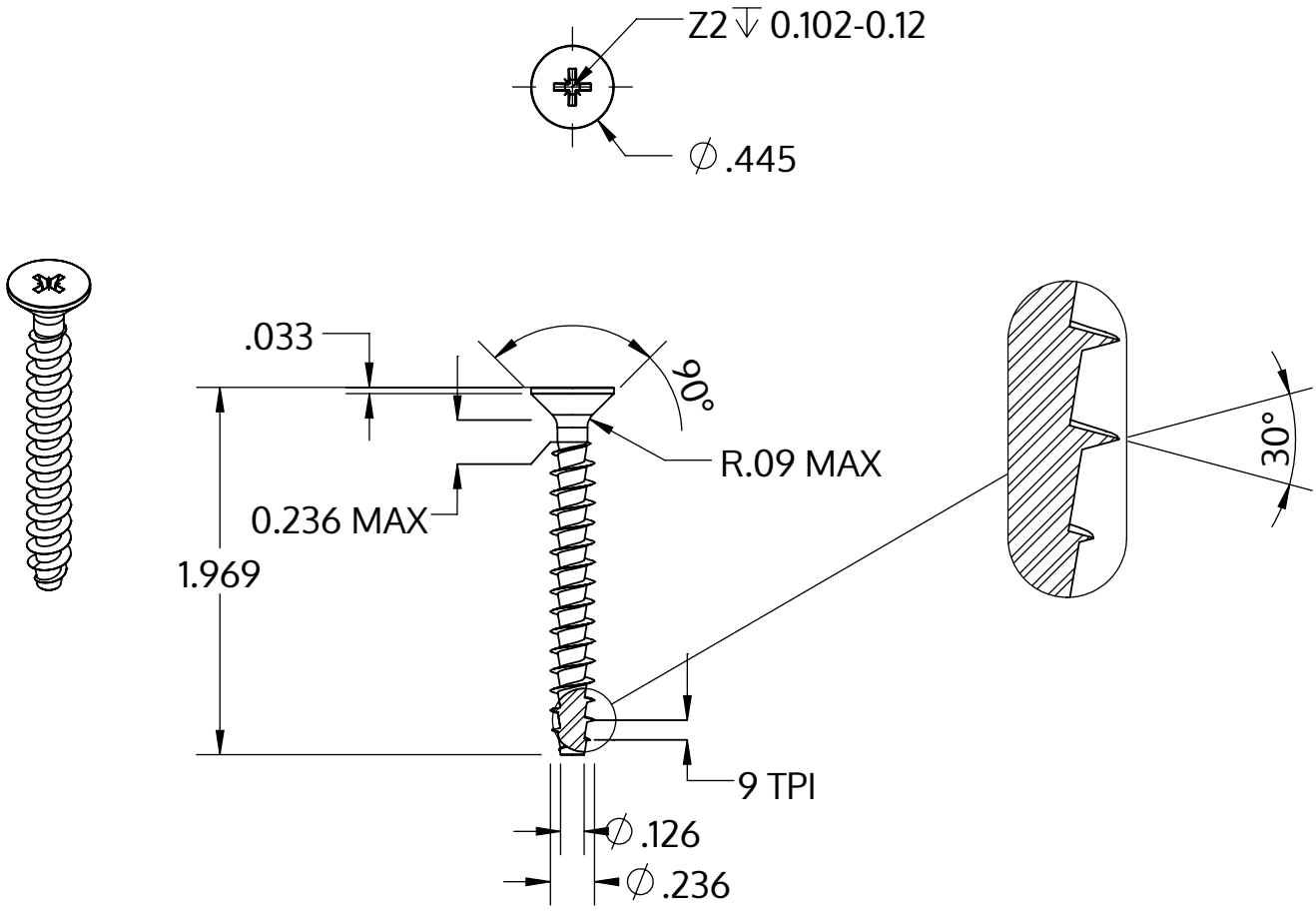

Metric size	M6 x 2.69 mm
US size (converted)	#0.236-9
	Tolerances [inch]
Length	+/- 0.031
Head diameter	+0 / -0.016
Head height	
Thread diameter	+0.007 / -0

Description	STP23A 6.0x50.0 - Z2
Material	steel, hardened
Surface	zinc-plated 5-7 µm, baked, blue / transparent passivated
Weight	6.238 kg / 1000 pieces

SCREWERK	**STP23A0600500S**	
Inch Drawing Size A	Scale 1:1	2024-10