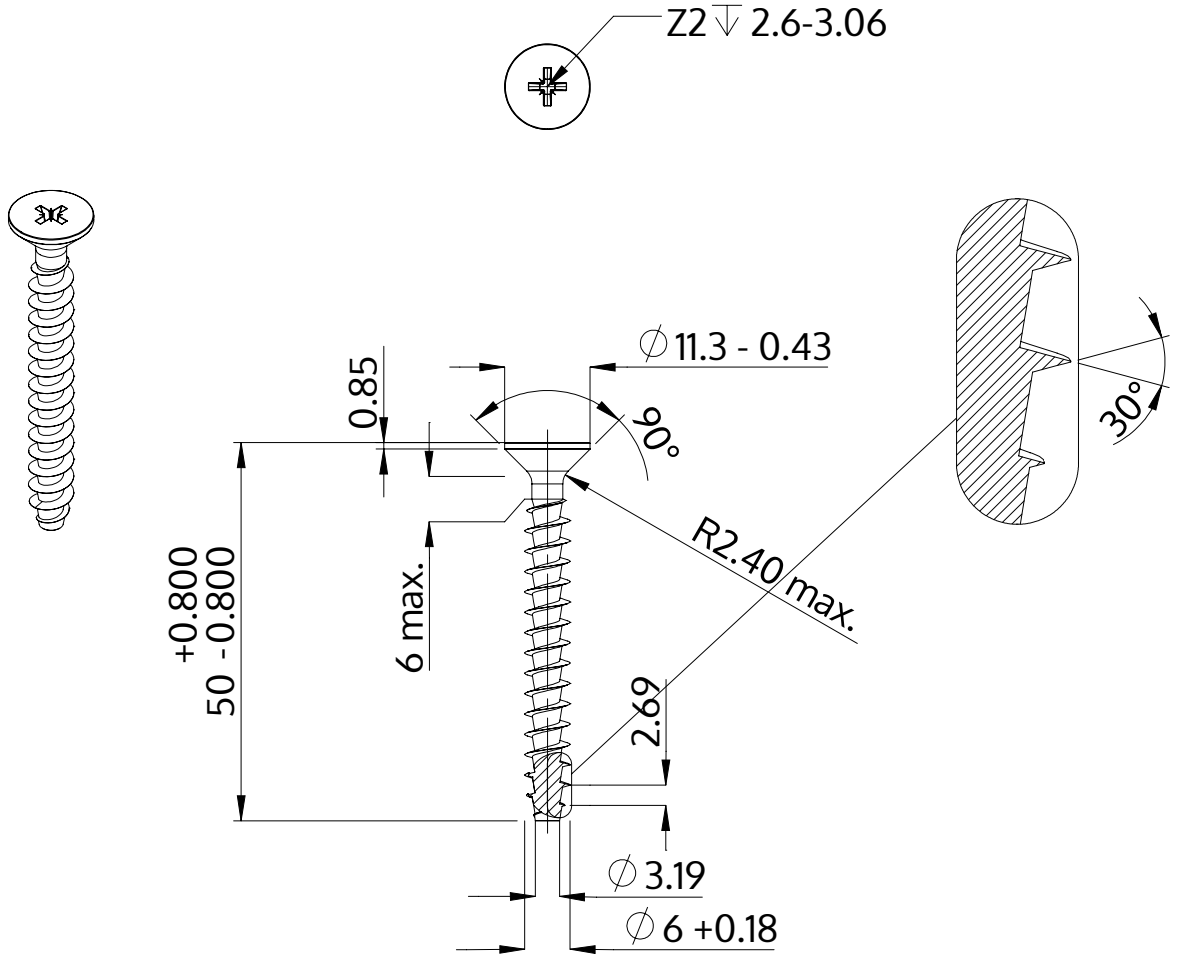

Description	STP23A 6.0x50.0 - Z2
Material	steel, hardened
Surface	zinc-plated 5-7 µm, baked, blue / transparent passivated
Weight	6.238 kg / 1000 pieces

SCREWERK	**STP23A0600500S**	
Metric Drawing A4	Scale 1:1	2024-10