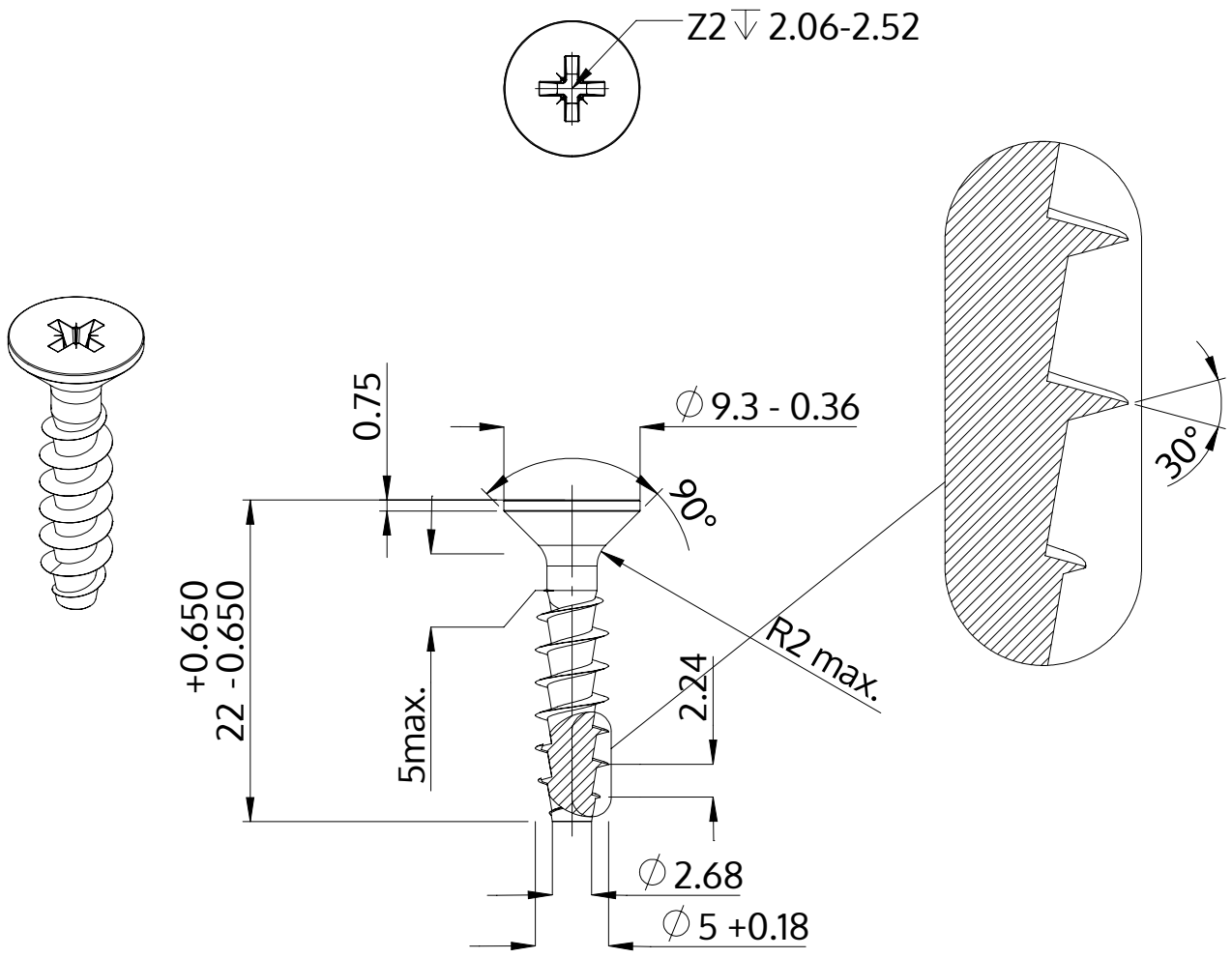

Description	STP23A 5.0x22.0 - Z2
Material	stainless-steel A2
Surface	bright, pickled and passivated
Weight	2.093 kg / 1000 pieces

SCREWERK	**STP23A0500220E**	
Metric Drawing A4	Scale 2:1	2024-10