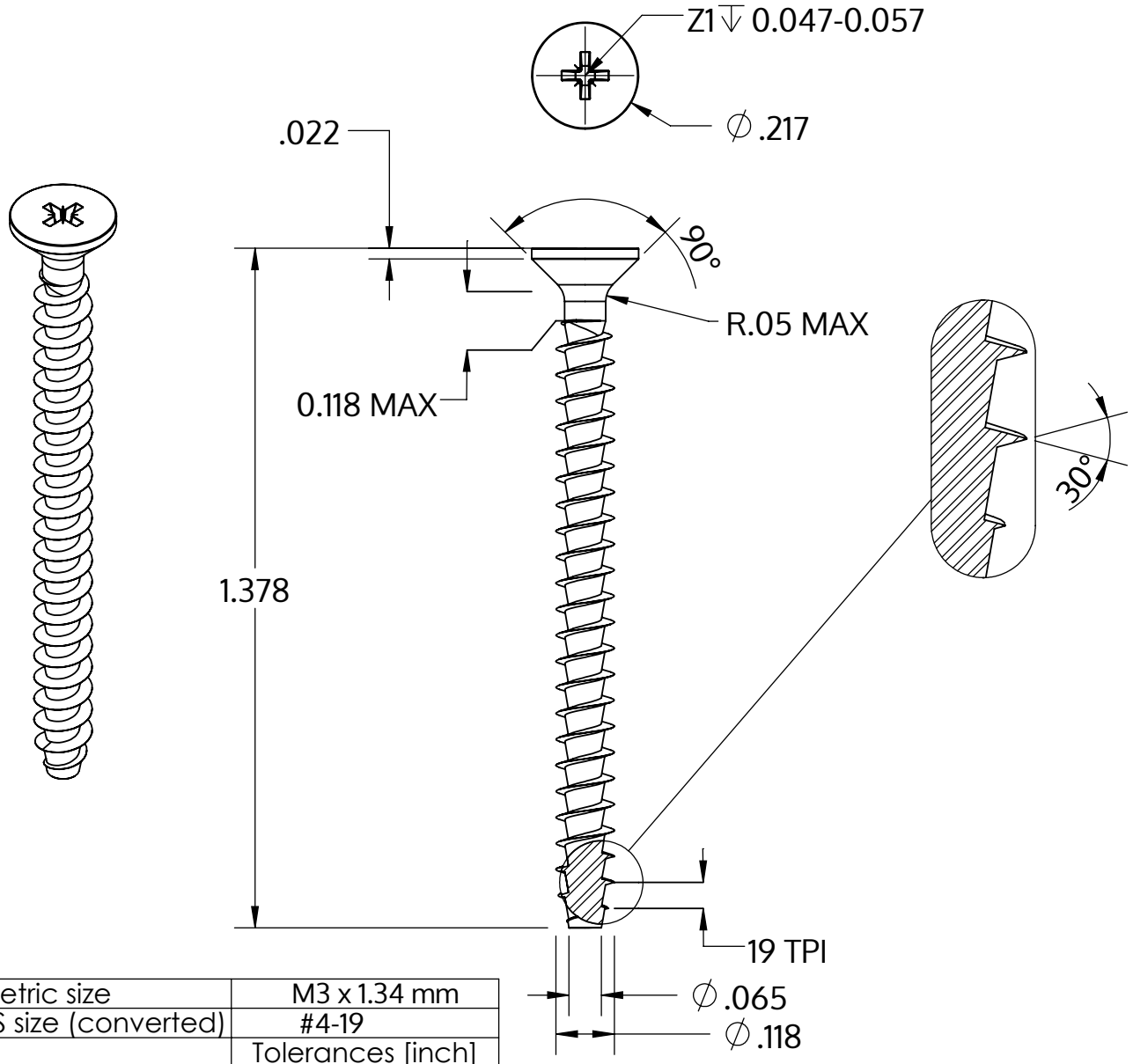

Metric size	M3 x 1.34 mm
US size (converted)	#4-19
	Tolerances [inch]
Length	+/- 0.031
Head diameter	+0 / -0.011
Head height	
Thread diameter	+0.005 / -0

Description	STP23A 3.0x35.0 - Z1
Material	stainless-steel A2
Surface	bright, pickled and passivated
Weight	1.108 kg / 1000 pieces

SCREWERK

STP23A0300350E

Inch Drawing Size A	Scale 3:1	2024-10