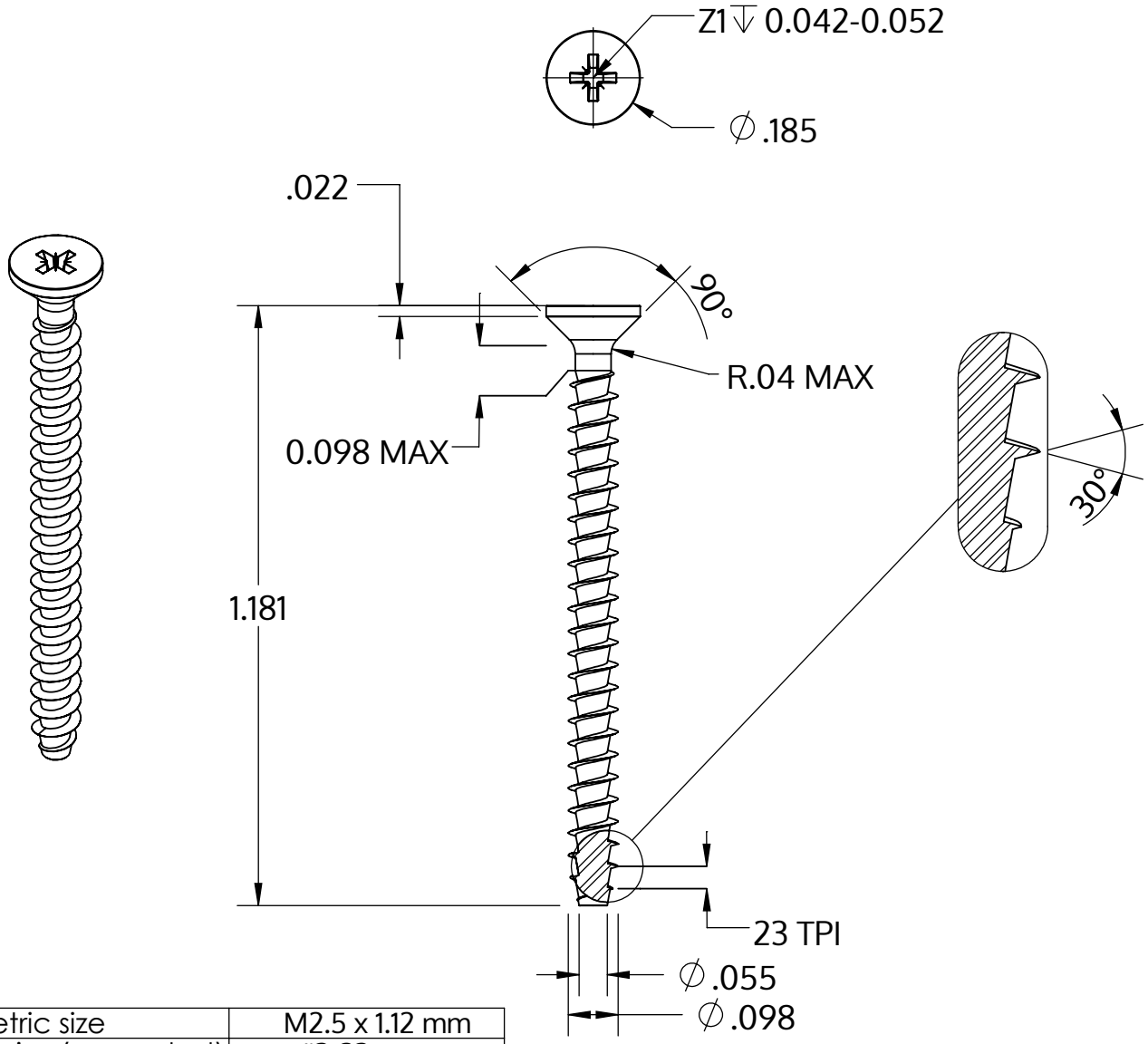

Metric size	M2.5 x 1.12 mm
US size (converted)	#3-23
	Tolerances [inch]
Length	+/- 0.025
Head diameter	+0 / -0.011
Head height	
Thread diameter	+0.005 / -0

Description	STP23A 2.5x30.0 - Z1
Matière	acier inoxydable A2
Surface	brillant décapé et passivé
Poids	0.672 kg / 1000 Unité

SCREWERK	**STP23A0250300E**	
_Zoll Zeichnung Größe A	Redimensionner 3:1	2024-10