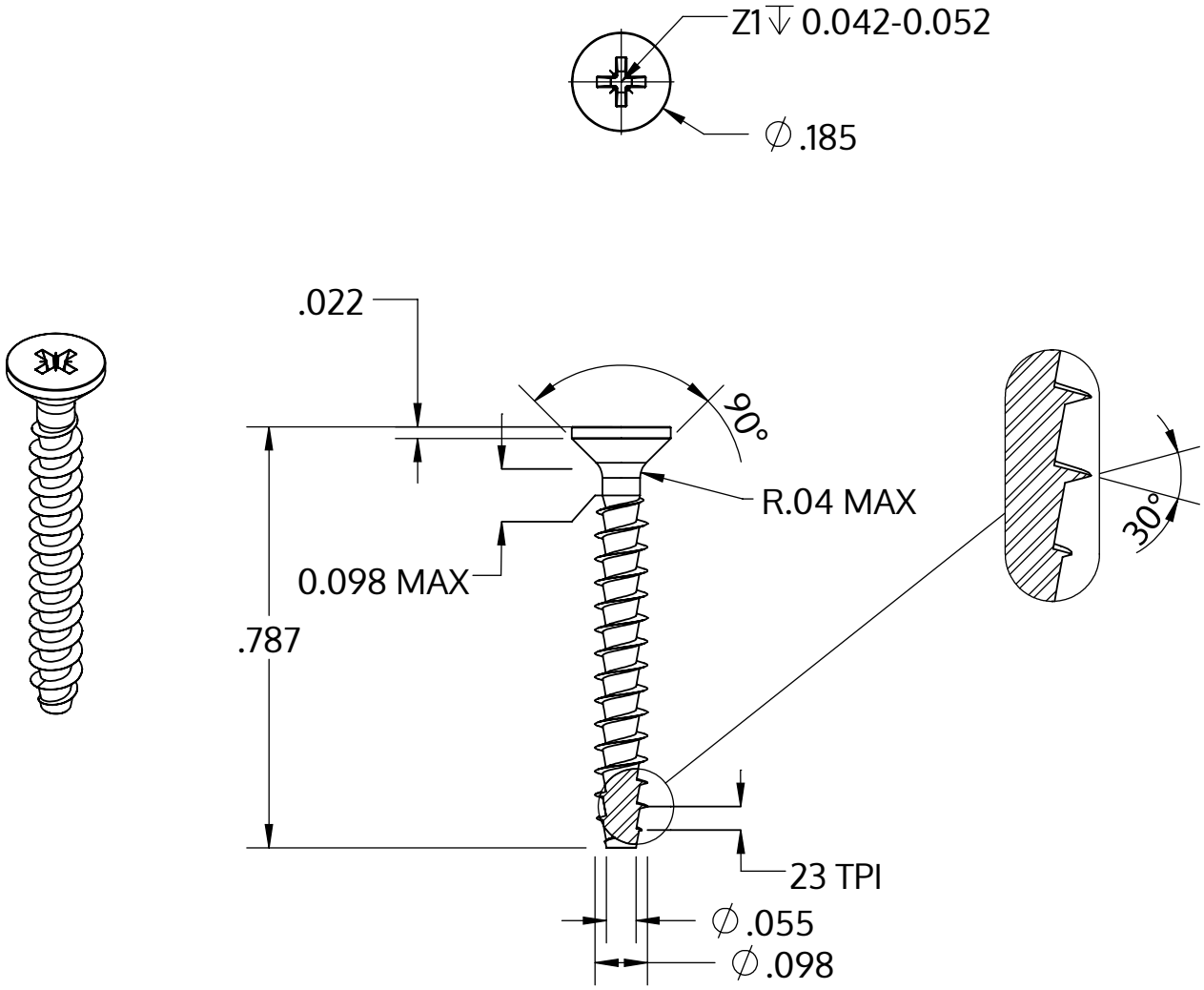

Metric size	M2.5 x 1.12 mm
US size (converted)	#3-23
	Tolerances [inch]
Length	+/- 0.025
Head diameter	+0 / -0.011
Head height	
Thread diameter	+0.005 / -0

Description	STP23A 2.5x20.0 - Z1
Material	stainless-steel A2
Surface	bright, pickled and passivated
Weight	0.467 kg / 1000 pieces

SCREWERK	**STP23A0250200E**	
Inch Drawing Size A	Scale 3:1	2024-10