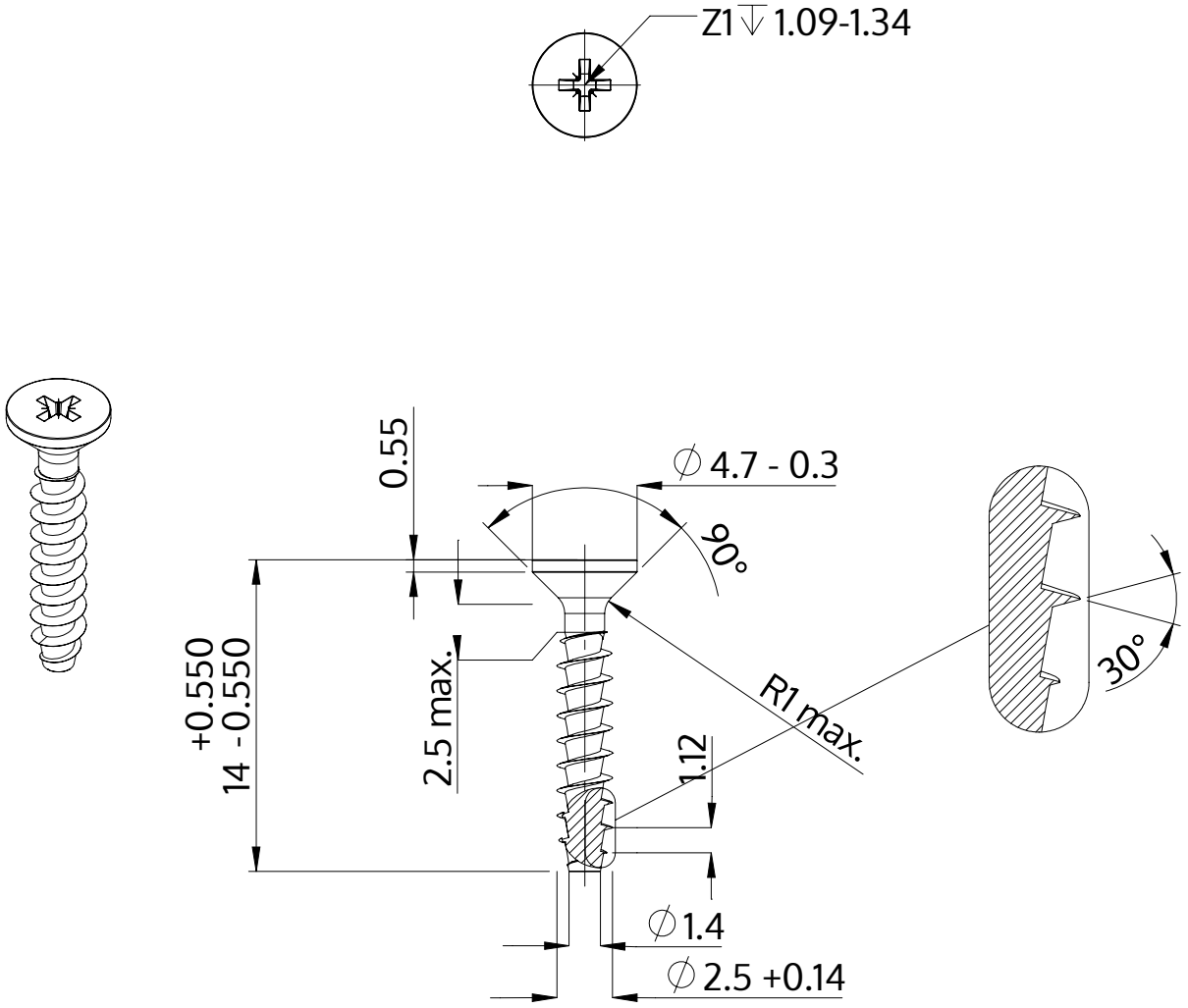

Description	STP23A 2.5x14.0 - Z1
Material	stainless-steel A2
Surface	bright, pickled and passivated
Weight	0.344 kg / 1000 pieces

SCREWERK	**STP23A0250140E**	
Metric Drawing A4	Scale 3:1	2024-10