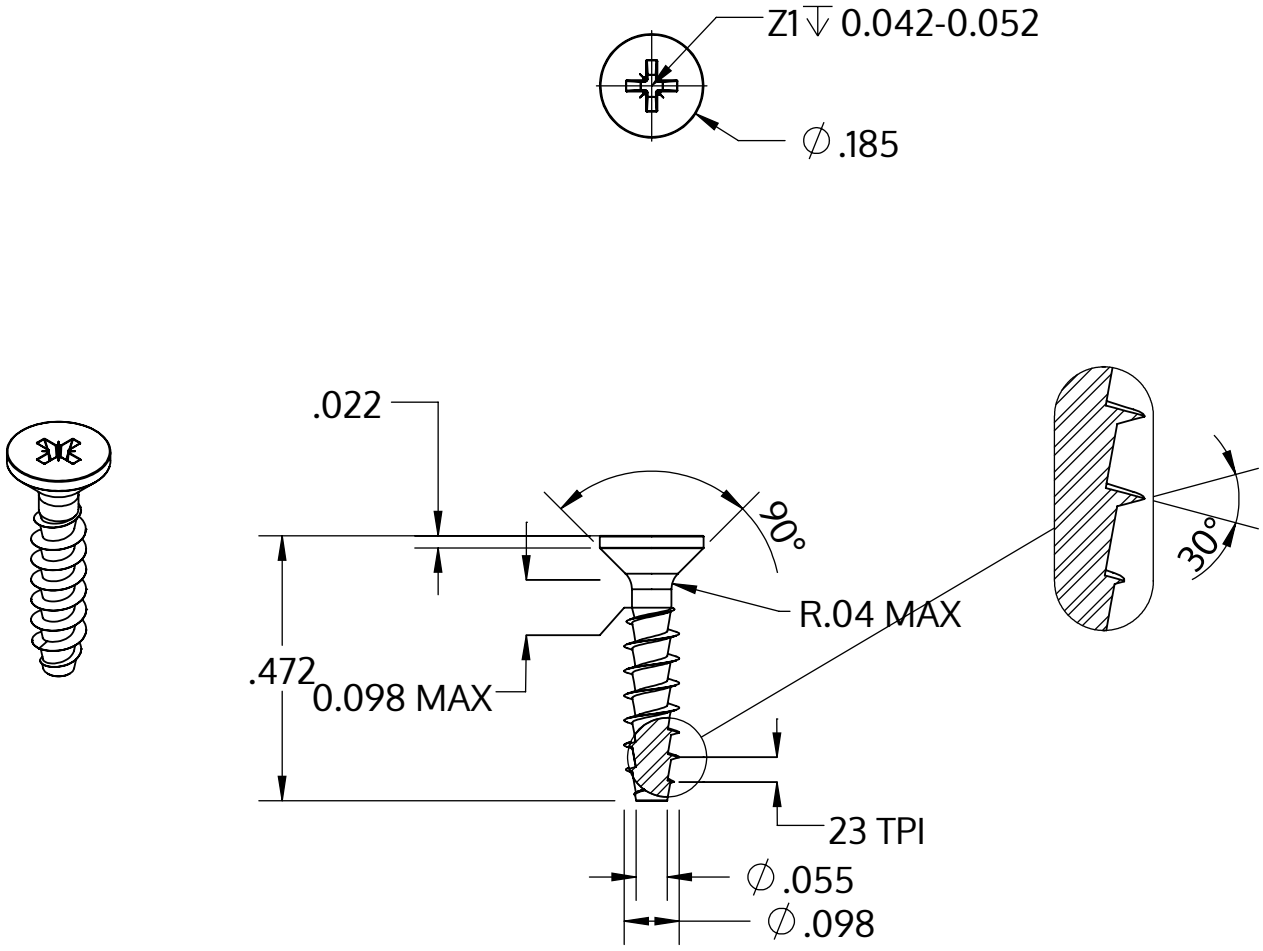


| | |
|---|---|
| Metric size | M2.5 x 1.12 mm |
| US size (converted) | #3-23 |
| | Tolerances [inch] |
| Length | +/- 0.021 |
| Head diameter | +0 / -0.011 |
| Head height | |
| Thread diameter | +0.005 / -0 |

| | |
|---|---|
| Beschrijving | STP23A 2.5x12.0 - Z1 |
| Materiaal | veredeld staal |
| Oppervlak | verzinkt 5-7 µm, getempert, blauw / transparant gepassiveerd |
| Gewicht | 0.303 kg / 1000 stuk |

| | | |
|---|---|---|
| SCREWERK | **STP23A0250120S** | |
| _Zoll Zeichnung Größe A | Schaal 3:1 | 2024-10 |