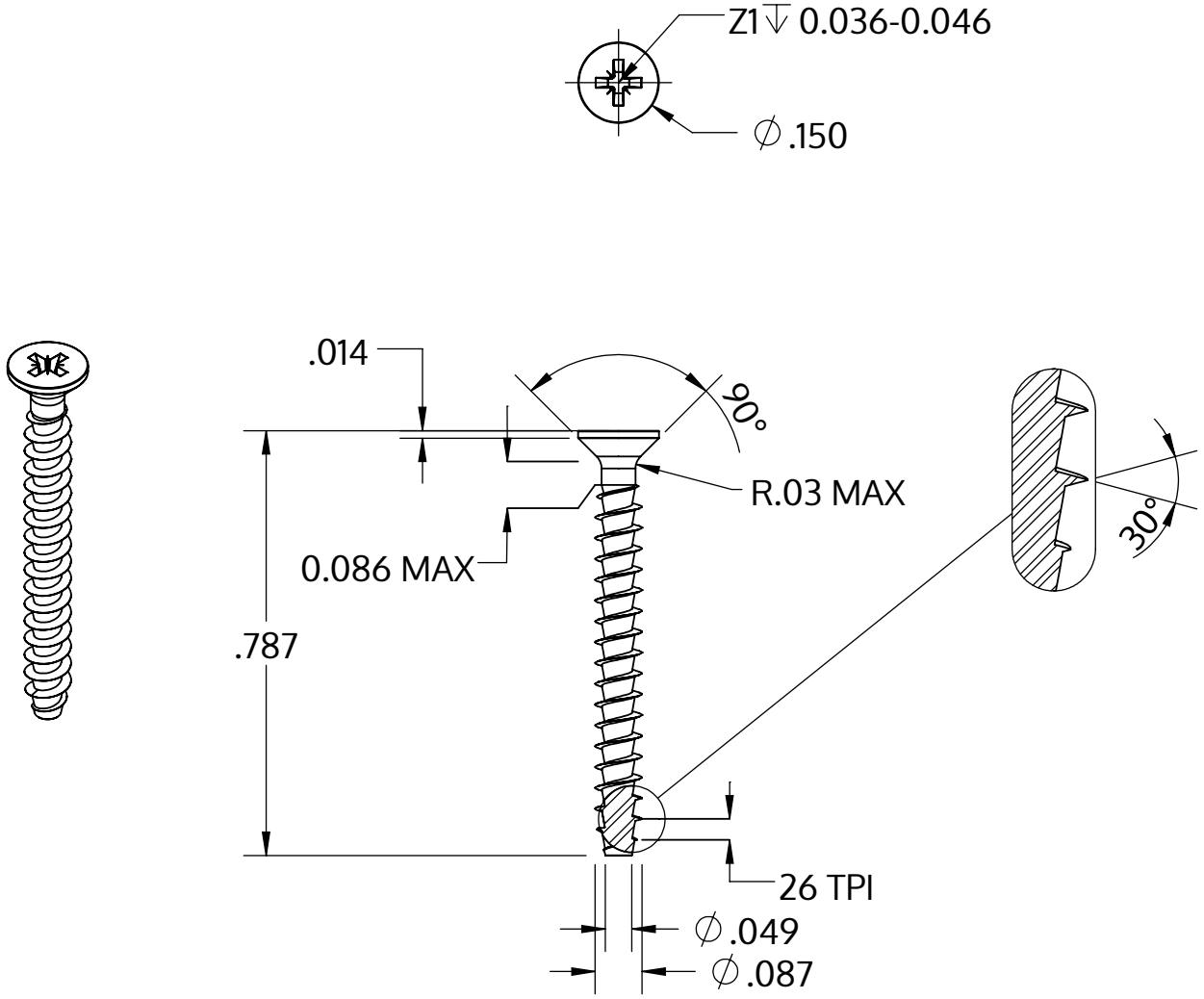

Metric size	M2.2 x 0.98 mm
US size (converted)	#2-26
	Tolerances [inch]
Length	+/- 0.025
Head diameter	+0 / -0.011
Head height	
Thread diameter	+0.005 / -0

Description	STP23A 2.2x20.0 - Z1
Material	steel, hardened
Surface	zinc-plated 5-7 µm, baked, blue / transparent passivated
Weight	0.340 kg / 1000 pieces

SCREWERK	**STP23A0220200S**	
Inch Drawing Size A	Scale 3:1	2024-10