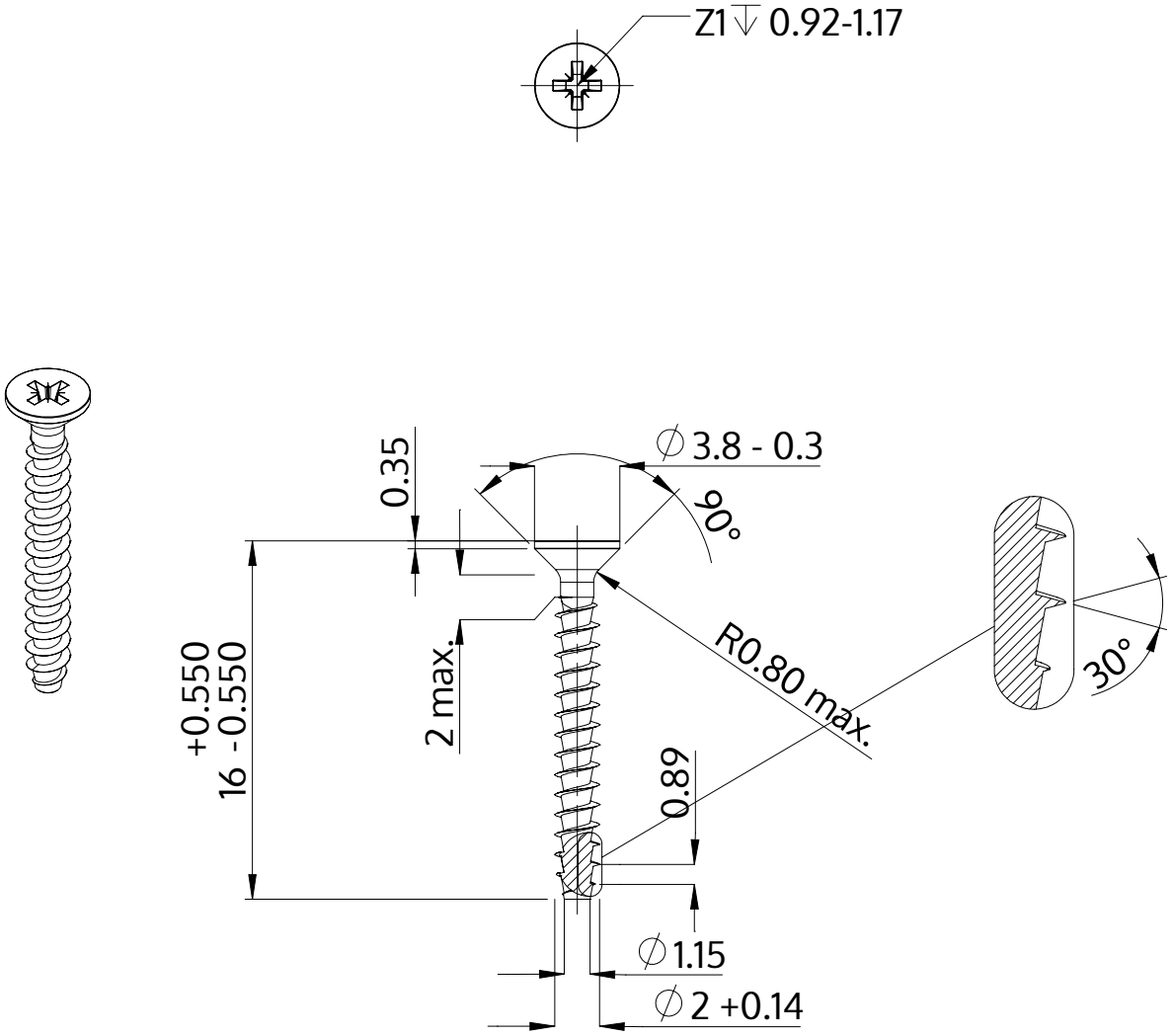

Description	STP23A 2.0x16.0 - Z1
Material	stainless-steel A2
Surface	bright, pickled and passivated
Weight	0.279 kg / 1000 pieces

SCREWERK	**STP23A0200160E**	
Metric Drawing A4	Scale 3:1	2024-10