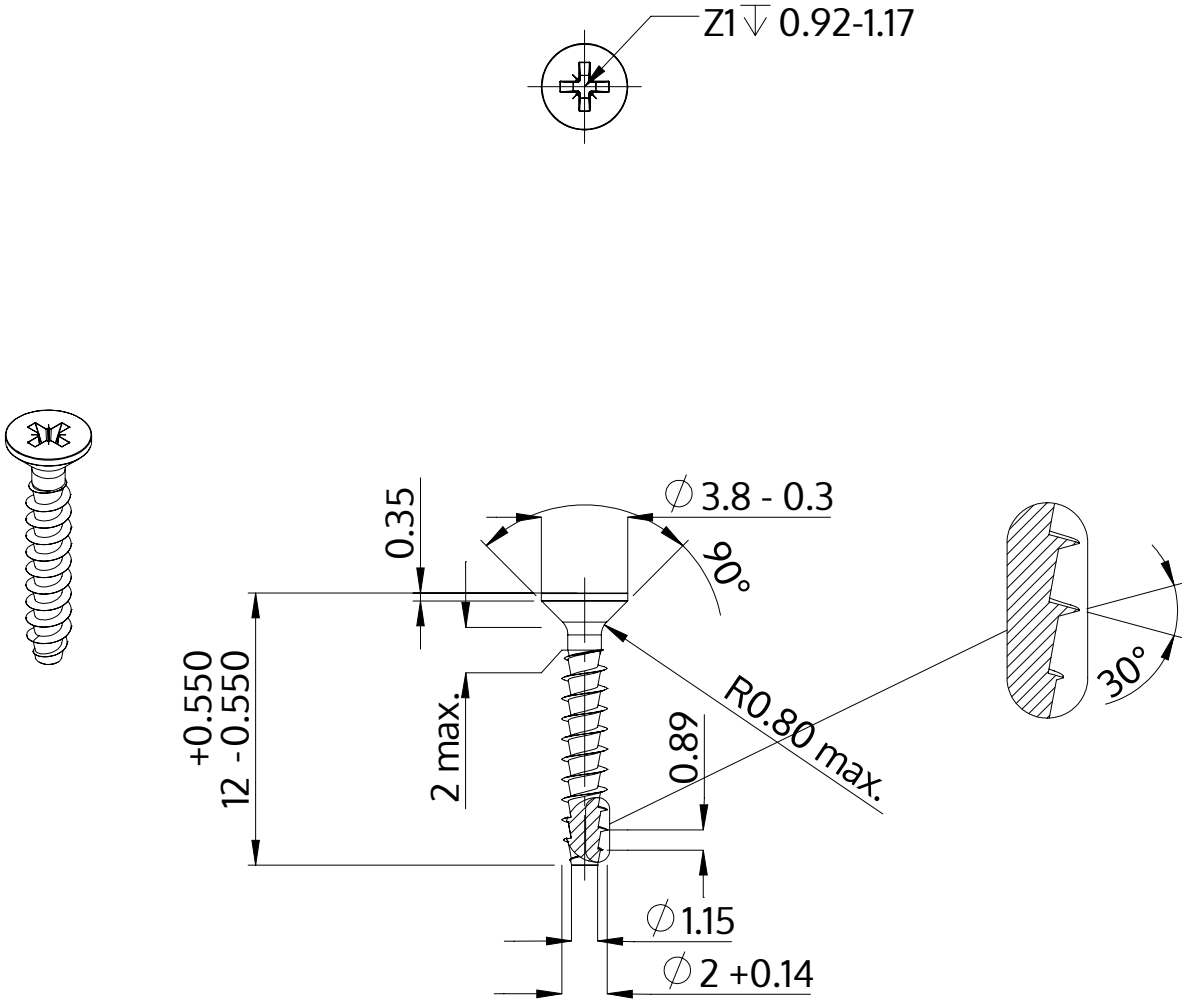

Description	STP23A 2.0x12.0 - Z1
Material	steel, hardened
Surface	zinc-plated 5-7 µm, baked, blue / transparent passivated
Weight	0.222 kg / 1000 pieces

SCREWERK	**STP23A0200120S**	
Metric Drawing A4	Scale None:1	2024-04