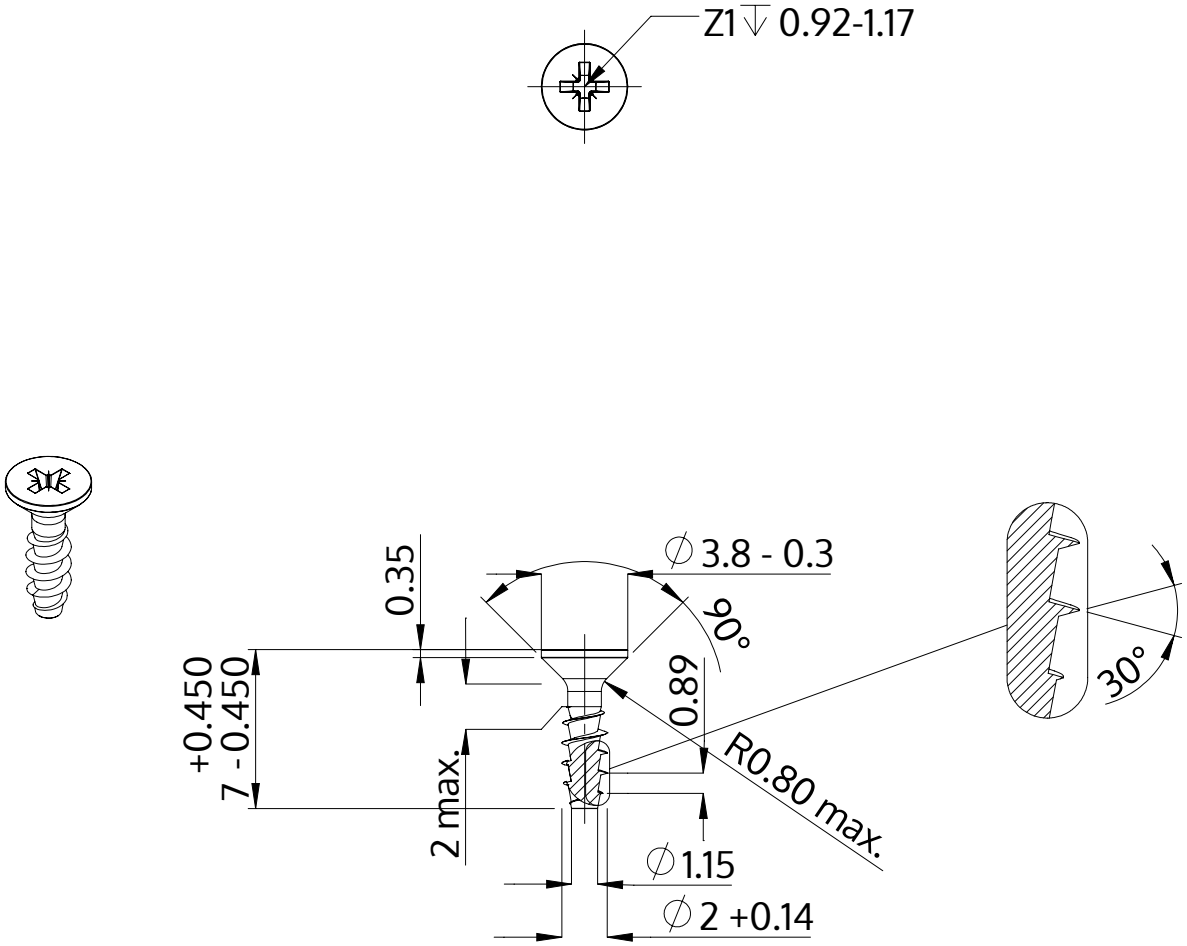


| | |
|---|---|
| Description | STP23A 2.0x7.0 - Z1 |
| Material | steel, hardened |
| Surface | zinc-plated 5-7 µm, baked, blue / transparent passivated |
| Weight | 0.150 kg / 1000 pieces |

| | | |
|---|---|---|
| SCREWERK | **STP23A0200070S** | |
| Metric Drawing A4 | Scale 3:1 | 2024-10 |