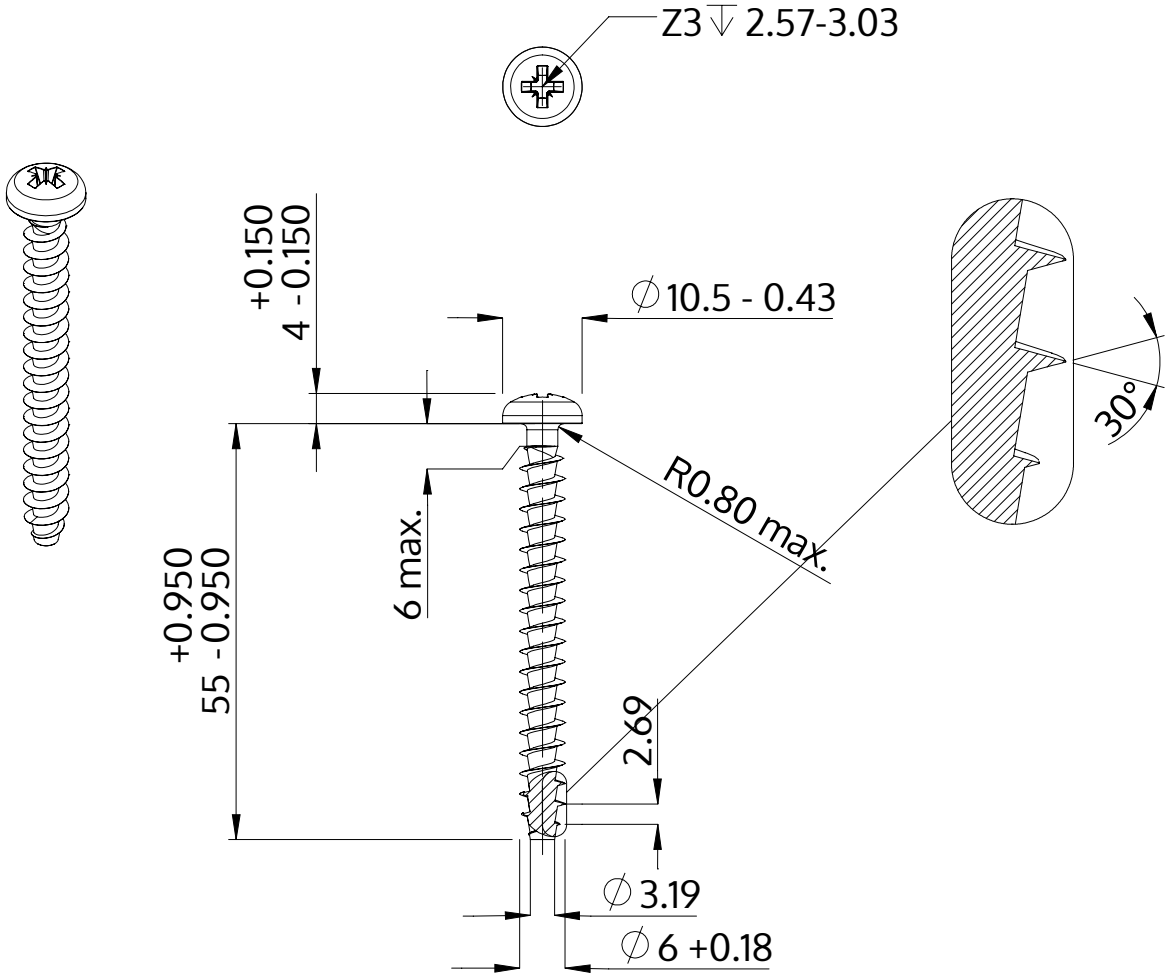

Description	STP22A 6.0x55.0 - Z3
Material	steel, hardened
Surface	zinc-plated 5-7 µm, baked, blue / transparent passivated
Weight	7.401 kg / 1000 pieces

SCREWERK	**STP22A0600550S**	
Metric Drawing A4	Scale 1:1	2024-10