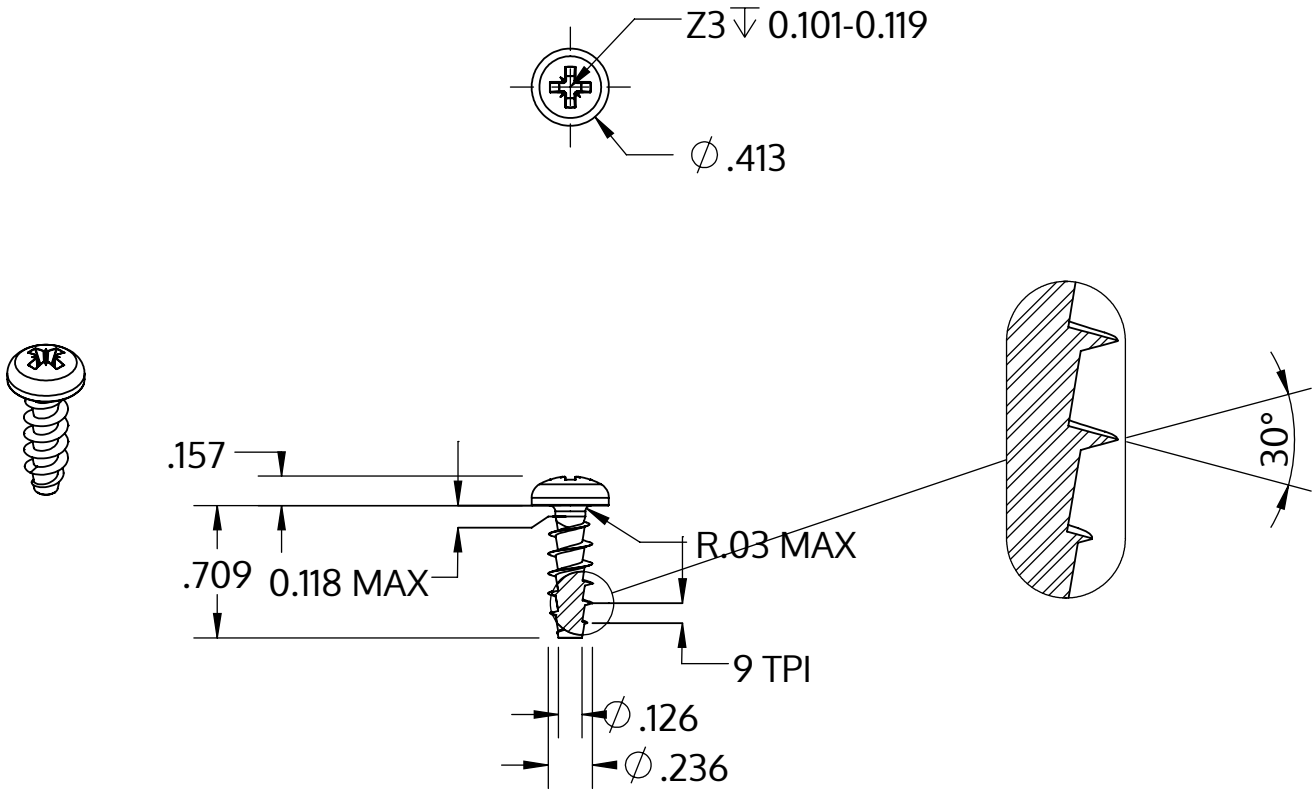

Metric size	M6 x 2.69 mm
US size (converted)	#0.236-9
	Tolerances [inch]
Length	+/- 0.021
Head diameter	+0 / -0.016
Head height	+/- 0.005
Thread diameter	+0.007 / -0

Description	STP22A 6.0x18.0 - Z3
Material	stainless-steel A2
Surface	bright, pickled and passivated
Weight	3.623 kg / 1000 pieces

SCREWERK	**STP22A0600180E**	
Inch Drawing Size A	Scale 1:1	2024-10